PRESTO
STACKERS, LIFT AND TILT TABLES

2946 Larimer St. Denver, CO 80205
303-295-1100 / 800-373-7693
FAX 303-295-2464
Email info@snyderequipment.com
www.snyderequipment.com

Table of Contents

Guidelines

How to Select a Stacker 2
How to Select a Scissor Lift 3
How to Select a Tilt Table 4
Glossary of Terms 5

Stackers

Manual Foot Operated Stackers 6
Manual Hand Operated Stackers 6
Battery Operated Stackers 7
Counterweight Stackers 7
Straddle Stackers 8
Pallet Stackers 9
A/C Electric Stackers 10
Drum Stackers 10
Work Positioners 11
Stacker Options 12 & 13

Hydraulic Lifts and Tilts

Scissor Lifts 14
Wide Base Scissor Lifts 14
Light Duty Scissor Lifts Manual & Electric Stationary 15
Portable Scissor Lifts Manual & Battery 16
Double Scissor Lifts Electric & Battery 17
Floor Level Lifts 18
Floor Level Tilters 18
Container Tilters 19
Portable Container Tilters 19
Tilt Tables 20
Wide Base Tilt Tables 20
Floor Level Lift & Tilts 21
Lift & Tilt Combination 21
Post Lift Tables 22
Hydraulic Lift & Tilt Options 23

Pneumatic Lift and Tilts

Pneumatic Scissor Lifts 24
Pneumatic Tilts 25
Pallet Positioner 25
Lift & Tilt Combination 26
Lift & Rotate Combination 27
Pneumatic Options 28
P3 - Presto Pallet Positioner 29
P4 - Floor Level Loader 30

Policies

Presto Lifts Sales Policies 31
Return Goods Authorization 31
Limited Warranty 32

Presto LIFTS™

Select a Stacker

Guidelines for Stackers

What Lift Height is Required?

Fixed mast units range from 50” – 86”. Telescopic (2 stage) mast units range from 94” to 144”.

What is the Weight of the Heaviest Load?

1000, 1500, 2000, 2700 lbs. and 3000 lbs. capacities are available. Take into consideration added weight of pallet or container.

What is Length (Front to Back) of Load?

Load center capacity is as important as weight capacity (see separate load center (L.C.) diagram pg. 13).

- 48” long pallets require 24” L.C.
- 40” long pallets require 20” L.C.

Length of load must not be longer than twice the size of the rated load center.

What Type of Lifting Power?

Manual operated lifts for lighter weights and lighter work cycles. Electric (AC or DC) for heavier work cycles and loads.

What About Overall Height?

Overall height is 14” – 18” higher than lifting height. Take into consideration doorways, pipes, lighting and overhead obstructions.

What are the Width Restrictions?

With or without load, check width of doorways, narrow aisles or congested areas to be navigated.

What Type of Load is Being Lifted?

Would special attachments help? Ram, boom with hook, remote control, special forks or platforms, etc. (See options and attachments page 12 and 13.)

Platform Models

Platform models are used as portable lift tables in numerous ergonomic applications. (Oversize platforms available on special order.)

Non-Straddle Fork Models

Non-straddle fork models have base legs close together. Normally used for skids where wheels and base legs, as well as forks go under skid.

Straddle Fork Models

Straddle fork models have wider base legs (out-riggers) which straddle load or pallet. (Example: a 48” wide pallet requires 50” I.D. straddle legs.)

Custom Applications

Many standard lifts can be modified for special lifting tasks. Please consult our technical sales department.

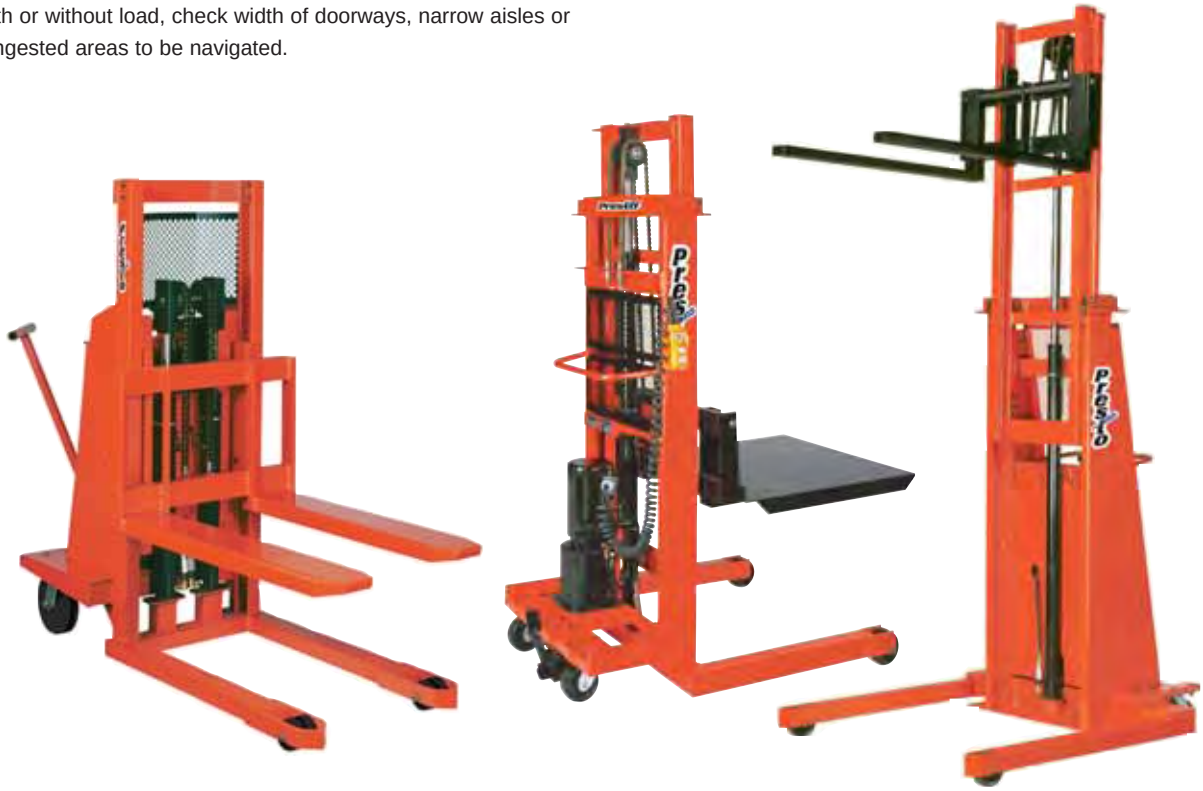

Presto LIFTS™

Guidelines for Scissor Lift

Vertical Travel

Determine the maximum raised height requirements to select vertical travel model.

Load Capacity and Side/End Loading Capacities

Load capacity is the amount of weight of an evenly balanced and centered load. Side/End capacity is the weight of the load over the edge when lift is in a fully raised position (often less than balanced load capacity).

Platform Size

Standard platform sizes conform to standard base sizes. Platform sizes may be widened and/or lengthened up to an additional 24". Side/End capacity is downrated by 2% per inch on all oversized platforms.

Power Supply

Single phase 1 HP motor or three phase 1 1/2 HP motor is standard as shown. Upon request motors can be interchanged. External/Remote power units are also available.

Controls

Hand held, push button up/down control is standard. Optional foot operated controls, wall-mounted controls, and limit switches are alternate types of controls.

Frequency and Speed of Operation

Standard motor is intermittent duty rated. If usage is more than one full lift every four minutes or jogging action every 10 seconds, motor will overheat. Optional external power units available, as well as for increased lifting speed.

Lowered Height

For a lower than standard height, pit mounted units (ground level) are available. Pit mounted units must have beveled platform edges or electromechanical toe guards to conform to OSHA recommendations. Toe guards extend length and width of standard platform by 8".

Mechanical

- Oversized Platforms: platforms can be widened and lengthened up to an additional 24".
- Platforms with Beveled Edges: increases standard platform size 4" on each side.
- Pit Mounted Units: require electromechanical toe guards or a beveled edge platform. Lifting eyes are also required for installation.
- Portable (for moving empty lifts): 2 steel wheels – side or end mounted with wheeled dolly. For oversized platforms, please consult the factory.
- Turntables: custom sizes are available.
- Conveyor Tops, Ball Transfer Platforms and special fixtures.
- Optional Top Material: stainless steel skin and diamond plate.
- Transportable package available with two fixed and two swivel casters for moving loaded units.

Power Unit (Motors)

- Single phase 1 HP motor or three phase 1 1/2 HP motor can be interchanged on most models at no extra charge. (Not available on XS models.)
- External/Remote, and Air Motors are available, please consult the sales department

Electric Controls

- Push button hand held control (NEMA 12) with 8' cord is standard.
- Optional foot operated up/down control with safety cover.
- Wall-mounted control (NEMA 4) is available.
- Pedestal mounted controls feature NEMA 12 push button enclosure.

Other Options

- Accordion (bellows) skirts
- Non-flammable and low temp. hydraulic fluid
- Wash down units
- Adjustable flow control valve
- Fork pockets

Select a Tilt Table

Guidelines for Tilt Tables

Loads Being Tilted

Determine all types of loads that might be tilted, i.e. boxes, pallets, wire baskets, crated, corrugated steel, wire bound wood boxes, etc. to assure proper model.

Loads Capacity

Take into consideration the weight of the container and contents, and off-centered and shifting loads.

Degree of Tilt

Determine the degree of tilt needed: 30˚, 45˚, 60˚ and 90˚. All 60˚ and 90˚ tilt tables must be lagged down to the floor.

Platform size

Standard platform sizes conform to standard bases. Platform sizes can be widened and lengthened. Determine width, length (depth) and height of load being tilted. Standard lip size 8”. Optional oversize lip available for larger loads (containers). Gussets (1 or 2) for squaring (centering) load are an available option.

Orientation of Tilt

Determine which side the unit will tilt on. Platform size of 36” x 48” could be tilted on either the 36” or the 48” side depending on application.

Type of Mount

Units can be floor mounted, stand mounted, or scissor lift mounted (for vertical lift and tilt). All tilt applications must be lagged to the floor. Lift and tilt applications require tilt tables to be mounted on the roller end of the scissor lifts, and not exceed use.

Power Supply

Standard and wide base tilt tables have 115/1/60 1 HP motors. There is an option for 220, 460/3/60 1 1/2 HP motor. Lightweight tilt tables have 115/1/60 1/3 HP motors only. Lift and tilt applications operate on two (2) separate power packs, unless otherwise specified.

Controls

Hand held, push button up/down controls are standard on all tilt tables. Standard and wide base tilt tables can interchange a foot control. Lightweight tilt tables have an option for a foot control. Lift and tilt applications require two (2) separate controls.

Standard and Wide Base Tilter Options

- Oversize lip up to 24” (over 24” consult factory)
- Gussets (reinforcing sides, lip/platform)
- Oversize platform (wider and longer) in 6” increments
- Floor stand – 12” high is standard (custom sizes available).
- Fork pockets (not available on some units).
- 3 Phase 1 1/2 HP motor (208, 220, 460/3/60) – not available for light-weight models.
- Controls – A hand held push button control is standard, unless otherwise specified. A foot or pedestal control is optional.
- External, larger motors available on some models. Consult factory.
- Accordion protective skirts
- Pit mounted units require a beveled edge – extends standard top 8” (4” each side) – or electromechanical toe guards. Consult Factory.
- Portable and transportable options available on some units.

Glossary of Terms

Accordion Skirting (Bellows): A device attached to the lift table platform that covers the internal components of a lift table.

Airbag: A pneumatic device used to raise and lower a lift table.

Axle Load: A dynamic load which is applied to the loading edge of a lift platform in any raised position.

Base Frame: The bottom component of a scissor lift table.

Bevel Toe Guard: A plate mounted flush with the vertical edge of the platform and slanted inwardly to eliminate a shear point when a lift table is pit mounted.

Control: A device used to regulate the function of a unit.

Cylinder: A device that converts fluid power into linear force and motion.

Electric Toe Guard: A device mounted below the platform such that when an obstruction is met during descent, the lift will be brought to rest before entrapment can occur.

End/Side Edge Load Capacity: The maximum amount of static load that can be applied to the edge of the platform (end or side) when the lift is in any raised position.

Hinged Bridge: A hinged transition plate which is attached to the edge of the platform and used to bridge the gap between the platform and the landing and/or truck bed.

Lifting Capacity: The rated load of a scissor lift applied as a uniformly distributed load.

Limit Switch: An electro/mechanical device used to locate a lift table platform at a specific height.

Load Center: The horizontal distance from the back of the forks or platform to the center of gravity of the load being lifted.

Lowered Height: The height of the platform in a fully retracted position.

Maintenance Device (Safety Chock): A device used to secure the lift in a raised position while routine maintenance or service is being performed.

Platform: The top component of a lift table.

Platform Ends: The edges of the platform that are perpendicular to the scissor legs. The end dimension is considered the platform width.

Platform Sides: The edges of the platform that are parallel to the scissor legs. The side dimension is considered the platform length.

Portability Set: A device used to move or relocate an empty lift. Lift equipped w/2 fixed wheels, pull plate and ‘T’ handle.

Power Unit: An integral power supply unit usually containing a pump, motor (air or electric), reservoir, relief valve, and directional control.

Rated Capacity: The maximum load which can be applied according to the manufacturer’s specification.

Rated Load: The maximum capacity as specified by the equipment nameplate.

Raised Height: The maximum height of the platform deck when a unit is in the fully extended position.

Rollover Capacity: The maximum amount of single axle load which may be rolled over the platform surface when the lift is in as is position.

Scissor Lift: A raising/lowering device that is supported or stabilized by one or more sets of pantograph leg section.

Stacker: A manually maneuvered device that is used to raise or lower a product to a specific elevation. The vertical action can be either powered or manual.

Tilter: A device used to position product by tilting to a specific angle.

Transport Set: A device used to move or relocate a loaded lift. Lift equipped w/ 4 castors.

Turntable: A device used to position product by turning to a specific location.

Velocity Fuse: A hydraulic valve which in the event of a severed hose will prevent the lift from falling.

Vertical Creep: Extremely slow speed movement of a scissor lift that is the result of normal, internal settling of fluid control valves.

Vertical Travel: The difference between the fully raised height of the platform deck and the fully lowered height of the platform deck.

Manual Stackers

Foot Operated Stackers

Model Number	Load Capacity	Raised Height	Lowered Height	Dimensions H / W / L	Base Legs I.D./O.D.	Wheel Dia. Front/Rear	Shipping Weight
M100 Series - Platform (24” W x 24” L) - 15” Load Center							
M152	1000 lbs	52”	5 1/4”	66”x26”x38”	15” / 21”	5” / 4”	270 lbs
M166	1000 lbs	66”	5 1/4”	80”x26”x38”	15” / 21”	5” / 4”	290 lbs
M178	1000 lbs	78”	5 1/4”	92”x26”x38”	15” / 21”	5” / 4”	300 lbs
M300 Series - Platform (32” W x 30” L) - 18” Load Center							
M352	1000 lbs	52”	5 1/4”	66”x32”x44”	24” / 30”	5” / 4”	350 lbs
M366	1000 lbs	66”	5 1/4”	80”x32”x44”	24” / 30”	5” / 4”	370 lbs
M378	1000 lbs	78”	5 1/4”	92”x32”x44”	24” / 30”	5” / 4”	390 lbs
M200 Series - Adjustable 25” Forks (Non-Straddle) - 15” Load Center							
M252	1000 lbs	52”	5 1/4”	66”x27”x42”	15” / 21”	5” / 4”	340 lbs
M266	1000 lbs	66”	5 1/4”	80”x27”x42”	15” / 21”	5” / 4”	360 lbs
M278	1000 lbs	78”	5 1/4”	92”x27”x42”	15” / 21”	5” / 4”	390 lbs
M400 Series - Adjustable 30” Forks (Straddle) - 18” Load Center							
M452	1000 lbs	50”	3 1/4”	66”x32”x49”	26” / 32”	5” / 4”	370 lbs
M466	1000 lbs	64”	3 1/4”	80”x32”x49”	26” / 32”	5” / 4”	390 lbs
M478	1000 lbs	76”	3 1/4”	92”x32”x49”	26” / 32”	5” / 4”	410 lbs

Features

- 1000 lb. capacity @ 15” and 18” load centers
- Lifting heights - 50” through 78”
- Slip on platforms available
- 1” thick x 3” wide adjustable solid steel forks
- Forks adjust from 6 1/2” to 26 1/2” O.D.
- 12” high fork backs on non-straddle
- 14” high fork backs on straddle models
- Foot operated pump with tip toe release
- Lift rise approximately 1 1/8” per stroke
- Perforated metal safety screen
- Foot-operated safety floor lock
- Leaf type chain with 8250 lbs. yield point
- High impact floor saving phenolic wheels

Stacker options on pages 12 & 13

Hand Operated Stackers

Model Number	Load Capacity	Raised Height	Lowered Height	Dimensions H / W / L	Base Legs I.D./O.D.	Wheel Dia. Front/Rear	Shipping Weight
M800 Series - Adjustable 30” Forks (Straddle) - 18” Load Center							
M852-2000	2000 lbs	50”	3 1/4”	66”x32”x51”	26” / 32”	5” / 5”	460 lbs
M866-2000	2000 lbs	64”	3 1/4”	80”x32”x51”	26” / 32”	5” / 5”	480 lbs
M878-2000	2000 lbs	76”	3 1/4”	92”x32”x51”	26” / 32”	5” / 5”	500 lbs

Features

- 2000 lb. capacity @ 18” load center
- Lifting heights - 50” through 76”
- Slip on 32” x 30” platform available
- 1 1/2” thick x 3” wide adjustable solid steel forks
- Forks adjust from 6 1/2” to 26 1/2” O.D.
- 14” high fork backs
- Hand operated pump (2 cycle) with hand release
- Lift rise approximately 1/2” per stroke
- Perforated metal safety screen
- Foot-operated safety floor lock
- Dual leaf type chain with 8250 lb. yield point
- High impact floor saving phenolic wheels

Stacker options on pages 12 & 13

Battery Stackers

Shown with custom platform

Battery Operated Stackers

Model Number	Load Capacity	Raised Height	Lowered Height	Dimensions H / W / L	Base Legs I.D./O.D.	Wheel Dia. Front/Rear	Shipping Weight
B600 Series - Adjustable 25” Forks (Non-Straddle) - 15” Load Center							
B652	1000 lbs	52”	5 1/4”	66”x27”x49”	15” / 21”	5” / 5”	500 lbs
B666	1000 lbs	66”	5 1/4”	80”x27”x49”	15” / 21”	5” / 5”	520 lbs
B678	1000 lbs	78”	5 1/4”	92”x27”x49”	15” / 21”	5” / 5”	540 lbs
B652-1500	1500 lbs	52”	5 1/4”	66”x27”x49”	15” / 22”	5” / 5”	530 lbs
B666-1500	1500 lbs	66”	5 1/4”	80”x27”x49”	15” / 22”	5” / 5”	550 lbs
B678-1500	1500 lbs	78”	5 1/4”	92”x27”x49”	15” / 22”	5” / 5”	570 lbs
B652-2000	2000 lbs	52”	5 1/4”	66”x27”x49”	20” / 26”	5” / 5”	550 lbs
B666-2000	2000 lbs	66”	5 1/4”	80”x27”x49”	20” / 26”	5” / 5”	570 lbs
B678-2000	2000 lbs	78”	5 1/4”	92”x27”x49”	20” / 26”	5” / 5”	590 lbs

Features

- 1000 - 2000 lb. capacity
- 15” load center
- Lifting heights - 52” - 78”
- Fixed mast
- 1” thick x 3” wide adjustable solid steel forks on 1000 & 1500 lb units
- 1 1/2” thick x 3” wide adjustable solid steel forks on 2000 lb units
- Forks adjust from 6 1/2” to 26 1/2” O.D.
- 12” high forks backs
- Lifting speed 5” per second
- Fixed base
- Heavy-duty 12 volt deep cycle battery
- Built-in 10 amp tapering battery charger
- Foot operated floor lock
- Leaf type chain with 8250 lbs yield point
- Optional 24” x 24” slip on platform
- Floor saving phenolic wheels
- Perforated metal safety screen

Stacker options on pages 12 & 13

Counterweight Stackers

Model Number	Load Capacity	Raised Height	Lowered Height	Dimensions H / W / L	Wheel Dia. Front/Rear	Shipping Weight
CW Series - Adjustable 25” Forks - 13” Load Center						
C62A-200	200 lbs	62”	1”	80”x27”x36”	5” / 5”	750 lbs
C62A-400	400 lbs	62”	1”	80”x27”x36”	5” / 5”	900 lbs
C62A-600	600 lbs	62”	1”	80”x27”x36”	5” / 5”	1000 lbs
C62A-800	800 lbs	62”	1”	80”x27”x36”	5” / 5”	1100 lbs
C62A-1000	1000 lbs	62”	1”	80”x27”x36”	5” / 5”	1200 lbs
C74A-200	200 lbs	74”	1”	92”x27”x36”	5” / 5”	775 lbs
C74A-400	400 lbs	74”	1”	92”x27”x36”	5” / 5”	925 lbs
C74A-600	600 lbs	74”	1”	92”x27”x36”	5” / 5”	1025 lbs
C74A-800	800 lbs	74”	1”	92”x27”x36”	5” / 5”	1125 lbs
C74A-1000	1000 lbs	74”	1”	92”x27”x36”	5” / 5”	1225 lbs
CW Series - Adjustable 30” Forks - 15” Load Center						
C62A-15	1000 lbs	62”	1”	80”x27”x41”	5” / 5”	1210 lbs
C74A-15	1000 lbs	74”	1”	92”x27”x41”	5” / 5”	1235 lbs
Overall length on C62 & C74 is 61” and on C62-15 & C74-15 is 71” Counterweight (ballast) included in pricing and shipping weights						

Features

- 1000 lb. capacity
- 13” & 15” load centers
- Lifting heights - 62” & 74”
- Lifting speed 5” per second
- Forks adjust from 6 1/2” to 20” O.D. between the wheels
- 15 1/2” high fork backs
- Presto Heavy Duty C100 Foot operated floor lock
- No outriggers
- Built-in 10 amp tapering battery charger
- Heavy-duty 12 volt deep cycle battery
- 1’ thick x 3” wide adjustable solid steel forks
- Hinged door with capacity display
- LED dash mount -- diagnostic display
- 3 position “Comfort Cushion” push handle
- Custom micro processor charger
- Quick connect battery cables (no tools required)

No other options permitted on counterweight units.

Presto LIFTS™

Straddle Stackers

Model Number	Load Capacity	Raised Height	Lowered Height	Dimensions H / W / L	Base Legs I.D./O.D.	Wheel Dia. Front/Rear	Shipping Weight
B800 Series - 20" Load Center							
B862-1500	1500 lbs	62"	2"	80"x32"x54"	26" / 32"	5" / 4"	625 lbs
B874-1500	1500 lbs	74"	2"	92"x32"x54"	26" / 32"	5" / 4"	650 lbs
B886-1500	1500 lbs	86"	2"	104"x32"x54"	26" / 32"	5" / 4"	670 lbs
B862-2000	2000 lbs	62"	2 1/2"	80"x32"x54"	26" / 32"	5" / 4"	635 lbs
B874-2000	2000 lbs	74"	2 1/2"	92"x32"x54"	26" / 32"	5" / 4"	660 lbs
B886-2000	2000 lbs	86"	2 1/2"	104"x32"x54	26" / 32"	5" / 4"	680 lbs
BT800 Series - 20" Load Center							
BT894-1500	1500 lbs	94"	2 1/2"	119"/73"x38"x55"	32" / 38"	5" / 4"	860 lbs
BT8107-1500	1500 lbs	107"	2 1/2"	133"/81"x38"x55"	32" / 38"	5" / 4"	920 lbs
BT8127-1500	1500 lbs	127"	2 1/2"	153"/93"x38"x55"	32" / 38"	5" / 4"	970 lbs
BT894-2000	2000 lbs	94"	2 1/2"	119"/73"x38"x55"	32" / 38"	5" / 4"	880 lbs
BT8107-2000	2000 lbs	107"	2 1/2"	133"/81"x38"x55"	32" / 38"	5" / 4"	930 lbs
BT8127-2000	2000 lbs	127"	2 1/2"	153"/93"x38"x55"	32" / 38"	5" / 4"	980 lbs

Units with the height over 93" will ship in the horizontal position.

Features

- 1500 - 2000 lb. capacity
- 20" load centers
- Lifting heights - 62" through 127"
- 1" thick x 3" wide x 30" long adjustable solid steel forks on 1500 lb B800 series
- 1 1/2" thick x 3" wide x 30" long adjustable solid steel forks on BT800 & 2000 lb B800 series
- Forks adjust from 6 1/2" to 26 1/2" O.D. on B800 series
- Forks adjust from 6 1/2" to 30" O.D. on BT800 series
- 15 1/2" high fork backs 1500 lb.
- 15" high fork backs 2000 lb.
- 14" high fork backs - BT 1500, 2000 lb.
- Fixed and telescopic mast
- Turning radius with 40" load
  - 85" aisle for B800 Series
  - 87" aisle for BT800 series
  (Allows for 12" of operator clearance)
- Hand operated floor lock
- Flow control valve for smooth lowering
- Lifting speed 5" per second
- Fixed base
- Heavy-duty 12 volt deep cycle battery
- Built-in 10 amp tapering battery charger
- Optional fifth wheel for greater mobility
- Dual leaf type chains with 8250 lb. yield point
- High impact phenolic load wheels

Stacker options on pages 12 & 13

PST - 27127-50

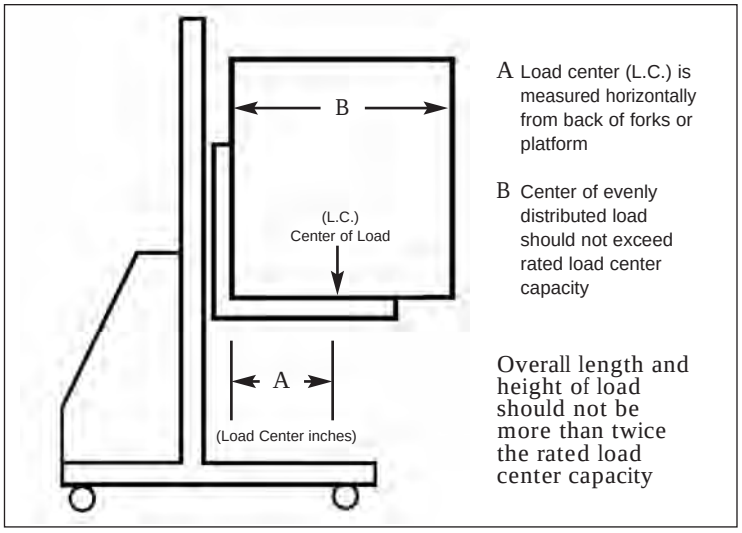

A Load center (L.C.) is measured horizontally from back of forks or platform

B Center of evenly distributed load should not exceed rated load center capacity

Overall length and height of load should not be more than twice the rated load center capacity

Pallet Stackers

Model Number	Load Capacity	Raised Height	Lowered Height	Dimensions H / W / L	Base Legs I.D./O.D.	Wheel Dia. Front/Rear	Shipping Weight
PS Series - 42” I.D. Straddle - 24” Load Center							
PS262	2000 lbs	62”	2 1/2”	80”x48”x70”	42”/48”	5” / 4”	875 lbs
PS274	2000 lbs	74”	2 1/2”	92”x48”x70”	42”/48”	5” / 4”	925 lbs
PS286	2000 lbs	86”	2 1/2”	104”x48”x70”	42”/48”	5” / 4”	975 lbs
PS2762	2700 lbs	60”	2 1/2”	80”x48”x70”	42”/48”	5” / 4”	1000 lbs
PS2774	2700 lbs	72”	2 1/2”	92”x48”x70”	42”/48”	5” / 4”	1045 lbs
PS50 Series - 50” I.D. Straddle - 24” Load Center							
PS62-50	1500 lbs	62”	2 1/2”	80”x56”x70”	50”/56”	5” / 4”	875 lbs
PS74-50	1500 lbs	74”	2 1/2”	92”x56”x70”	50”/56”	5” / 4”	925 lbs
PS86-50	1500 lbs	86”	2 1/2”	104”x56”x70”	50”/56”	5” / 4”	975 lbs
PS262-50	2000 lbs	62”	2 1/2”	80”x56”x70”	50”/56”	5” / 4”	900 lbs
PS274-50	2000 lbs	74”	2 1/2”	92”x56”x70”	50”/56”	5” / 4”	975 lbs
PS286-50	2000 lbs	86”	2 1/2”	104”x56”x70”	50”/56”	5” / 4”	1000 lbs
PS2762-50	2700 lbs	60”	2 1/2”	80”x56”x70”	50”/56”	5” / 4”	1025 lbs
PS2774-50	2700 lbs	72”	2 1/2”	92”x56”x70”	50”/56”	5” / 4”	1070 lbs
PSA Series - Adjustable Base - Straddle - (35” I.D. to 50” I.D.) - 24” Load Center							
PSA62	1500 lbs	62”	2 1/2”	80”x41”- 56”x72”	35”-50”/41”-56”	5” / 5”	995 lbs
PSA74	1500 lbs	74”	2 1/2”	92”x41”- 56”x72”	35”-50”/41”-56”	5” / 5”	1045 lbs
PSA86	1500 lbs	86”	2 1/2”	104”x41”- 56”x72”	35”-50”/41”-56”	5” / 5”	1095 lbs
PSA262	2000 lbs	62”	2 1/2”	80”x41”- 56”x72”	35”-50”/41”-56”	5” / 5”	1000 lbs
PSA274	2000 lbs	74”	2 1/2”	92”x41”- 56”x72”	35”-50”/41”-56”	5” / 5”	1045 lbs
PSA286	2000 lbs	86”	2 1/2”	104”x41”- 56”x72”	35”-50”/41”-56”	5” / 5”	1100 lbs
PSA2762	2700 lbs	60”	2 1/2”	80”x41”- 56”x72”	35”-50”/41”-56”	5” / 5”	1145 lbs
PSA2774	2700 lbs	72”	2 1/2”	92”x41”- 56”x72”	35”-50”/41”-56”	5” / 5”	1175 lbs
PST Series - 42” I.D. Straddle - Telescoping Mast - 24” Load Center							
PST294	2000 lbs	94”	2 1/2”	119”/73”x48”x71”	42”-48”	5” / 4”	1000 lbs
PST2107	2000 lbs	107”	2 1/2”	133”/81”x48”x71”	42”-48”	5” / 4”	1050 lbs
PST2127	2000 lbs	127”	2 1/2”	153”/93”x48”x71”	42”-48”	5” / 4”	1100 lbs
PST2144	2000 lbs	144”	2 1/2”	170”/99”x48”x71”	42”-48”	5” / 4”	1150 lbs
PST2794	2700 lbs	94”	2 1/2”	119”/73”x48”x71”	42”-48”	5” / 4”	1190 lbs
PST27107	2700 lbs	107”	2 1/2”	133”/81”x48”x71”	42”-48”	5” / 4”	1240 lbs
PST27127	2700 lbs	127”	2 1/2”	153”/93”x48”x71”	42”-48”	5” / 4”	1290 lbs
PST50 Series - 50” I.D. Straddle - Telescoping Mast - 24” Load Center							
PST294-50	2000 lbs	94”	2 1/2”	119”/73”x56”x71”	50”-56”	5” / 4”	1010 lbs
PST2107-50	2000 lbs	107”	2 1/2”	133”/81”x56”x71”	50”-56”	5” / 4”	1060 lbs
PST2127-50	2000 lbs	127”	2 1/2”	153”/93”x56”x71”	50”-56”	5” / 4”	1110 lbs
PST2144-50	2000 lbs	144”	2 1/2”	170”/99”x56”x71”	50”-56”	5” / 4”	1170 lbs
PST2794-50	2700 lbs	94”	2 1/2”	119”/73”x56”x71”	50”-56”	5” / 4”	1200 lbs
PST27107-50	2700 lbs	107”	2 1/2”	133”/81”x56”x71”	50”-56”	5” / 4”	1250 lbs
PST27127-50	2700 lbs	127”	2 1/2”	153”/93”x56”x71”	50”-56”	5” / 4”	1300 lbs
PSTA SERIES - Adjustable Base - Straddle - (35” I.D. to 50” I.D.) - 24” Load Center							
PSTA294	2000 lbs	94”	2 1/2”	119”/73”x41”-56”x73”	35”-50”/41”-56”	5” / 5”	1150 lbs
PSTA2107	2000 lbs	107”	2 1/2”	133”/81”x41”-56”x73”	35”-50”/41”-56”	5” / 5”	1200 lbs
PSTA2127	2000 lbs	127”	2 1/2”	153”/93”x41”-56”x73”	35”-50”/41”-56”	5” / 5”	1250 lbs
PSTA2794	2700 lbs	94”	2 1/2”	119”/73”x41”-56”x73”	35”-50”/41”-56”	5” / 5”	1400 lbs
PSTA27107	2700 lbs	107”	2 1/2”	133”/81”x41”-56”x73”	35”-50”/41”-56”	5” / 5”	1450 lbs
PSTA27127	2700 lbs	127”	2 1/2”	153”/93”x41”-56”x73”	35”-50”/41”-56”	5” / 5”	1500 lbs

Units with the height over 93” will ship in the horizontal position.

Features

- 1500 - 2700 lb. capacity
- 24” load centers
- Fixed or adjustable base
- Lifting heights - 62” through 144”
- Fixed and telescopic mast
- Hand operated floor lock
- 1 1/2” thick x 3” wide x 36” long adjustable solid steel forks (1500 & 2000 lb capacities)
- 1 1/2” thick x 4” wide x 36” long adjustable solid steel forks (2700 lb capacities)
- Lifting speed 4” per second for 1500, 2000 lb. lifts
- Lifting speed 2” per second for 2700 lb. lifts
- Heavy-duty 12 volt deep cycle battery
- Built-in 15 amp tapering battery charger
- Fifth wheel for greater mobility
- Dual leaf type chains with 8250 lb. yield point
- Dual rollerchain for 2700 lb. lift
- Forks adjust from 6 1/2” to 30” O.D.
- 14” high fork backs
- Turning radius with 48” load
  -106” aisle with 42” I.D. Base
  -110” aisle with 50” I.D. Base
  -112” aisle with adjustable base @ 50” I.D.

Stacker options on pages 12 & 13

Speciality Stackers

A/C Electric Stackers

Model Number	Load Capacity	Raised Height	Lowered Height	Dimensions H / W / L	Base Legs I.D./O.D.	Wheel Dia. Front/Rear	Shipping Weight
EPF Series - Portable - 30” Forks - 18” Load Center							
EPF752	1000 lbs	52”	5 1/4”	66”x32”x47”	24” / 30”	5” / 4”	445 lbs
EPF766	1000 lbs	66”	5 1/4”	80”x32”x47”	24” / 30”	5” / 4”	465 lbs
EPF778	1000 lbs	78”	5 1/4”	92”x32”x47”	24” / 30”	5” / 4”	485 lbs
ESF Series - Stationary - 30” Forks - 18” Load Center							
ESF750	1000 lbs	50”	3 1/4”	64”x32”x45”	24” / 30”	N/A	425 lbs
ESF764	1000 lbs	64”	3 1/4”	78”x32”x45”	24” / 30”	N/A	445 lbs
ESF776	1000 lbs	76”	3 1/4”	90”x32”x45”	24” / 30”	N/A	465 lbs
ESF782	1000 lbs	82”	3 1/4”	96”x32”x45”	24” / 30”	N/A	475 lbs
ESF788	1000 lbs	88”	3 1/4”	102”x32”x45”	24” / 30”	N/A	485 lbs
ESF794	1000 lbs	94”	3 1/4”	108”x32”x45”	24” / 30”	N/A	565 lbs
ESF7106	1000 lbs	106”	3 1/4”	120”x40”x45”	34” / 40”	N/A	605 lbs
ESF7118	1000 lbs	118”	3 1/4”	132”x40”x45”	34” / 40”	N/A	635 lbs
EPFT Series - Portable - 30” Forks - 18” Load Center							
EPFT796	1000 lbs	94”	5 1/4”	111”/66”x40”x56”	34” / 40”	5” / 5”	640 lbs
EPFT7110	1000 lbs	110”	5 1/4”	133”/81”x40”x56”	34” / 40”	5” / 5”	670 lbs
EPFT7130	1000 lbs	130”	5 1/4”	153”/93”x40”x56”	34” / 40”	5” / 5”	735 lbs

Units with the height over 93” will ship in the horizontal position.

Features

- 1000 lb. capacity
- 18” load centers
- Lifting heights - 52” through 130”
- Fixed and telescopic masks
- Stationary & portable units
- Lifting speed 4” per seconds
- Standard 1 HP 115/1/60 motor
- 1” thick x 3” wide x 30” long adjustable solid steel forks
- 12” high fork backs
- Optional motors available
- Optional slip on 32” x 30” platform
- Custom platforms
- Standard remote control w/ coil cord
- Leaf type chains with 8250 lb. yield point
- 1500 & 2000 lb. capacities available

Stacker options on pages 12 & 13

Shown with optional custom platform

Shown with optional DG-30 Drum Grabber

Drum Stackers

Model Number	Load Capacity	Raised Height	Lowered Height	Dimensions H / W / L	Base Legs I.D./O.D.	Wheel Dia. Front/Rear	Shipping Weight
DSM Series - Manually Operated - 30” Forks - 18” Load Center							
D48	1000 lbs	48”	1 1/2”	66”x32”x49”	26” / 32”	5” / 4”	380 lbs
D62	1000 lbs	62”	1 1/2”	80”x32”x49”	26” / 32”	5” / 4”	400 lbs
D74	1000 lbs	74”	1 1/2”	92”x32”x49”	26” / 32”	5” / 4”	420 lbs
DSB Series - Battery Operated - 30” Forks - 18” Load Center							
D862	1000 lbs	62”	1 1/2”	80”x32”x52”	26” / 32”	5” / 4”	550 lbs
D874	1000 lbs	74”	1 1/2”	92”x32”x52”	26” / 32”	5” / 4”	580 lbs
D886	1000 lbs	86”	1 1/2”	104”x32”x52”	26” / 32”	5” / 4”	590 lbs

Units with the height over 93” will ship in the horizontal position.

Features

- 1000 lb. capacity
- 18” load centers
- Lifting heights - 48” through 86”
- 1” thick x 3” wide x 30” long solid steel forks
- 15 1/2” high fork backs
- Manual & battery operated
- Optional drum grabber attachment
- Forks bolted at 15” I.D. for 55 gallon drum
- Forks bolted at 11 1/2” I.D. for 30 gallon drum

Stacker options on pages 12 & 13

Work Positioners

Non-Straddle Work Positioners

Model Number	Load Capacity	Raised Height	Lowered Height	Dimensions H / W / L	Base Legs I.D./O.D.	Wheel Dia. Front/Rear	Shipping Weight
WP Series - Non-Straddle - 24” Load Center							
WP36-20	2000 lbs	36	3 1/4”	60”x28”x65”	14” / 26 1/2”	3” / 8”	710 lbs
WP48-20	2000 lbs	48”	3 1/4”	72”x28”x65”	14” / 26 1/2”	3” / 8”	770 lbs
WP60-20	2000 lbs	60”	3 1/4”	84”x28”x65”	14” / 26 1/2”	3” / 8”	820 lbs
WP36-30	3000 lbs	36”	3 1/4”	60”x28”x65”	14” / 26 1/2”	3” / 8”	760 lbs
WP48-30	3000 lbs	48”	3 1/4”	72”x28”x65”	14” / 26 1/2”	3” / 8”	800 lbs
WP60-30	3000 lbs	60”	3 1/4”	84”x28”x65”	14” / 26 1/2”	3” / 8”	850 lbs

Not designed to lift wood pallets with bottom cross slats

Features

- 2000 - 3000 lb. capacity
- 24” load centers
- Lifting heights - 36” through 60”
- Fixed mast
- 2” thick x 6 1/4” wide x 42” long fixed steel forks
- 17” high fork carriage
- 14” fork I.D. & 26 1/2” fork O.D.
- 3 1/4” lowered height
- Steering wheel for greater mobility
- Lifting speed 2” per second 3000 lb. lift
- Fixed base
- Heavy-duty 12 volt deep cycle battery
- Built-in 15 amp tapering battery charger
- Hand operated floor lock
- Nylon front load wheels
- Polyurethane rear wheels 2000 lb. models
- Nylon rear wheels 3000 lb. models
- Optional slip-on platforms available
- 48” long forks available

Straddle Work Positioners

Model Number	Load Capacity	Raised Height	Lowered Height	Dimensions H / W / L	Base Legs I.D./O.D.	Wheel Dia. Front/Rear	Shipping Weight
WPS42 Series - 42” I.D. - 24” Load Center							
WPS4236-20	2000 lbs	36”	2”	59”x48”x65”	42” / 48”	5” / 8”	720 lbs
WPS4248-20	2000 lbs	48”	2”	71”x48”x65”	42” / 48”	5” / 8”	745 lbs
WPS4260-20	2000 lbs	60”	2”	83”x48”x65”	42” / 48”	5” / 8”	770 lbs
WPS4236-30	3000 lbs	36”	2”	59”x48”x65”	42” / 48”	5” / 8”	750 lbs
WPS4248-30	3000 lbs	48”	2”	71”x48”x65”	42” / 48”	5” / 8”	775 lbs
WPS4260-30	3000 lbs	60”	2”	83”x48”x65”	42” / 48”	5” / 8”	800 lbs
WPS50 Series - 50” I.D. - 24” Load Center							
WPS5036-20	2000 lbs	36”	2”	59”x56”x65”	50” / 56”	5” / 8”	730 lbs
WPS5048-20	2000 lbs	48”	2”	71”x56”x65”	50” / 56”	5” / 8”	755 lbs
WPS5060-20	2000 lbs	60”	2”	83”x56”x65”	50” / 56”	5” / 8”	780 lbs
WPS5036-30	3000 lbs	36”	2”	59”x56”x65”	50” / 56”	5” / 8”	760 lbs
WPS5048-30	3000 lbs	48”	2”	71”x56”x65”	50” / 56”	5” / 8”	785 lbs
WPS5060-30	3000 lbs	60”	2”	83”x56”x65”	50” / 56”	5” / 8”	810 lbs

For use in lifting wood pallets with bottom cross slats

Features

- 2000 - 3000 lb. capacity
- 24” load centers
- Lifting heights - 36” through 60”
- Fixed mast
- 2” thick x 6 1/4” wide x 42” long fixed steel forks
- 17” high fork carriage
- 14” fork I.D. & 26 1/2” fork O.D.
- 2” lowered height
- Steering wheel for greater mobility
- Lifting speed 4” per second 2000 lb. lift
- Lifting speed 2” per second 3000 lb. lift
- Fixed base
- Heavy-duty 12 volt deep cycle battery
- Built-in 15 amp tapering battery charger
- Hand operated floor lock
- Phenolic front load wheels
- Polyurethane rear wheels 2000 lb. models
- Nylon rear wheels 3000 lb. models
- Optional slip-on platforms available
- 48” long forks available

Presto LIFTS™

Stacker Options

Ram

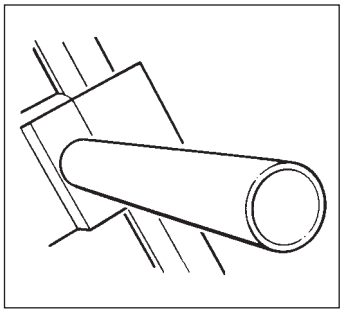

Model Number	Description and Specification	Shipping Weight
Interchanges with forks on adjustable fork models with sheet metal back plates, for roll and coil handling.		
RR1	Ram 2 1/2” round x 20” long, 1000 lb capacity @ 15” load center	13
RR2	Ram 2 1/2” round x 24” long, 1000 lb capacity @ 18” load center	16
RR3	Ram 2 1/2” round x 13” long, 1000 lb capacity @ 13” load center	12
RR4	Ram 2 1/2” round x 30” long, 1000 lb capacity @ 20” load center	20
RS1	Ram 3” square x 20” long, 1500 lb capacity @ 15” load center	15
RS2	Ram 3” square x 24” long, 1500 lb capacity @ 18” load center	24
RS3	Ram 2 1/2” square x 30” long, 1500 lb capacity @ 20” load center	22
RS4	Ram 3” square x 30” long, 1500 lb capacity @ 20” load center	27
Interchanges with fork models with shaft (ps) back plate		
RSPS24	Ram 3” square x 24” long 1500 lb capacity @ 18” load center	35
RSPS30	Ram 3” square x 30” long 1500 lb capacity @ 20” load center	35
RSPS36	Ram 3” square x 36” long 1500 lb capacity @ 24” load center	35

Boom with Hook

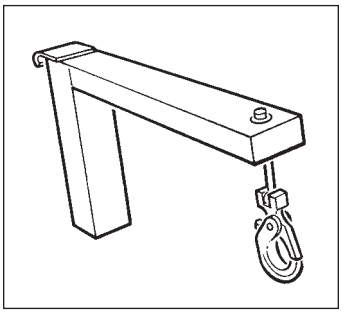

Model Number	Description and Specification	Shipping Weight
Mounts on fork model with sheet metal backplates for lifting and suspending loads.		
B13	13” boom with hook, 1000 lb capacity @ 13” load center	22
B15	15” boom with hook, 1000 lb capacity @ 15” load center	22
B20	20” boom with hook, 1000 lb capacity @ 20” load center	25
Mounts on fork models with shaft (ps) back plate		
B20-15PS	20” boom with hook 1500 lb capacity @ 20” load center	35
B24-15PS	24” boom with hook 1500 lb capacity @ 24” load center	45

Forks

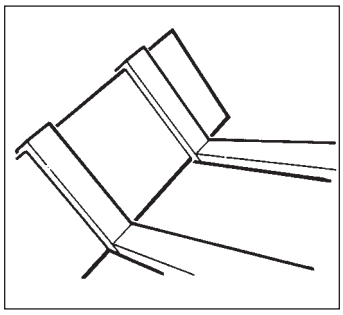

Model Number	Description and Specification	Shipping Weight
C119-25	Adjustable forks, pair 25” length	62
C119-30	Adjustable forks, pair 30” length	72
C119-36	Adjustable forks, pair 36” length	114
C119-42	Adjustable forks, pair 42” length	130
BP	Forks bolted in place	N/A
FF	Forks flat to the floor	N/A
Mount on fork models with sheet metal backplates (fork back with clips)		
C119-1	Pair 12” backs 25” length with 15” L.C. used on M200 series	62
C119-2	Pair 14” backs 30” length with 18” L.C. used on M400 series	72
C119-3	Pair 15 1/2” backs 25” length with 13” L.C. used on C62, C74	66
C119-4	Pair 15 1/2” backs 30” length with 15” L.C. used on C62-15, C74-15	76
C119-5	Pair 15” backs 30” length with 20” L.C. used on B800 1500/2000 lb.	72
C119-11	Pair 12” backs 25” length with 15” L.C. used on B600 1500/2000 lb.	62
C119-16	Pair 15” backs 36” length with 20” L.C. used on B800 1500/2000 lb.	114
Mount on fork models with shaft (ps) backplate		
C119-18	Pair 12” backs 36” length with 18” L.C. used on EPFT 1500/2000 lb.	114
C119-12	Pair 12” backs 30” length with 18” L.C. used on EPFT 1500/2000 lb.	80
C119-9	Pair 14” backs 30” length with 20” L.C. used on EPFT 1500/2000 lb.	80
C119-7	Pair 14” backs 36” length with 24” L.C. used on PS, PST 1500/2000 lb.	114
C119-PS-42	Pair 14” backs 42” length with 24” L.C. used on PS, PST 1500/2000 lb.	128
Custom fork and backplate sizes available, please consult customer service		

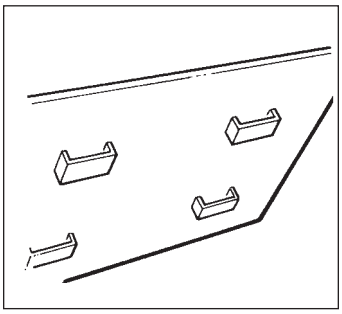

Slip on Platform

Model Number	Description and Specification	Shipping Weight
SP24	Slip-on platform, 24” x 24” for 13” and 15” load center	32
SP32	Slip-on platform, 32” x 30” for 18” and 20” load center	52
SP40	Slip-on platform, 40” x 36” for 24” load center	95
Custom platform sizes available, please consult customer service		

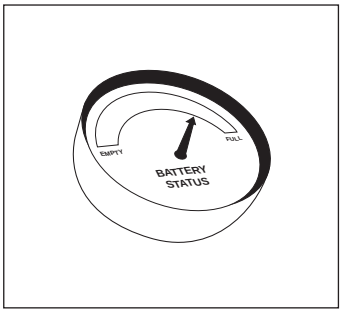

Battery Status gauge:
Indicates available battery charge.

Stacker Options

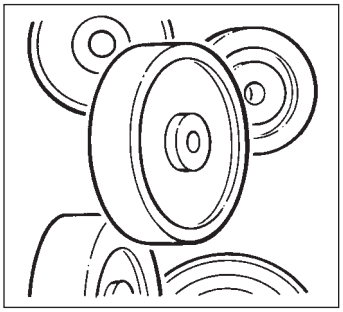

Wheel Material:
Standard wheels are phenolic plastic. Optional wheel material available.

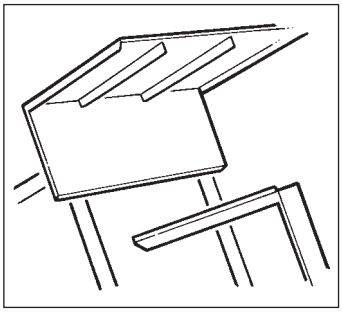

Reversed Forks:
Ideal for overhead installation. Forks can be modified in a reverse position giving an increased lowered / raised height. Consult Presto sales dept.

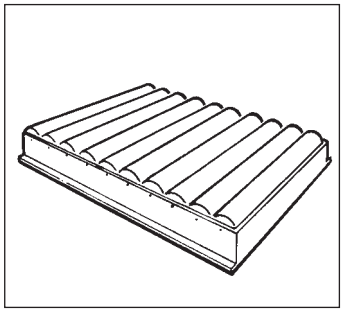

R-5 Roller Bed:
Excellent for transferring heavy objects to/from lift with minimum effort. Front or side loading. Rollers on 3” center. 27” x30” area, mounted on a 32” x 36” slip on platform. 1000 lb. cap.
R-5: Weight 145 lb.
(Requires 18” LC.)

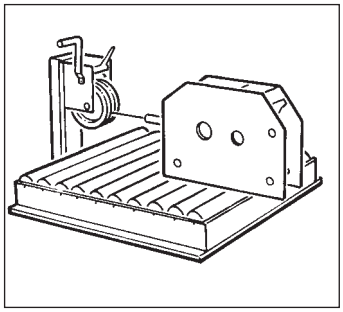

P-6 Die Puller:
Equipped with hand operated winch with cable and hook for pulling dies over roller bed. 27” x 30” roller area mounted 32” x 30” slip on platform. 1000 lb. capacity.
P-6: Weight 185 lb.
(Requires 18” LC.)

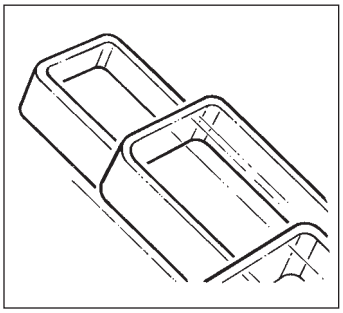

Height:
Standard lift heights can be decreased to meet special handling requirements. For telescopic mast units consult factory.

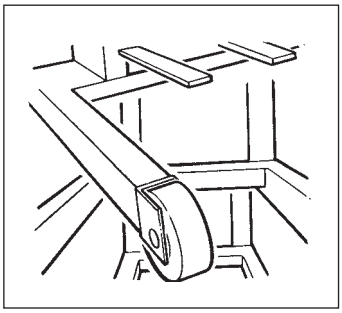

Base Legs:
Standard straddle dimensions can be increased or decreased to fit any size pallet or load. Available on straddle fork models only.

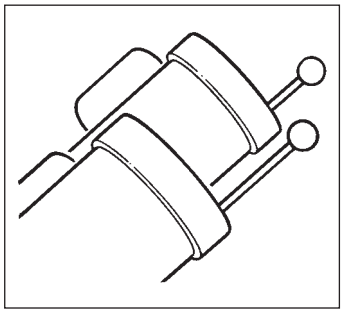

Larger Motor - AC:
Doubles lifting speed on Presto AC Electric Lifts; 1 Phase, 60 Cycle, 220V, 2HP or 2HP, 220/440V, 3 Phase, 60 Cycle AC motor. Larger unit available. Consult factory.

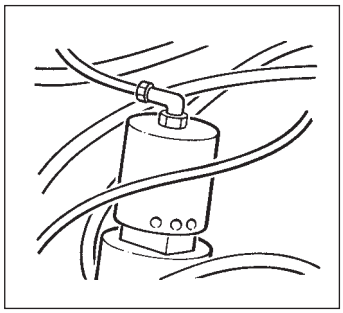

Air Power:
Optional air motors that operate from your factory airline supply are available.
At 1000 lb. cap. requires 30 cfm @ 80 psi air supply
At 1500, 2000 and 2700 cap. requires 45 cfm @ 80 psi air supply

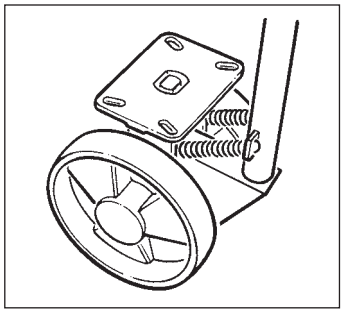

Fifth Wheel:
Recommended for lifts with wide straddles and heavier load capacities. 8” polyurethane plastic wheel and spring loaded handle. Factory installed on B800 and BT800 Series only.
FW: Weight 32 lbs.

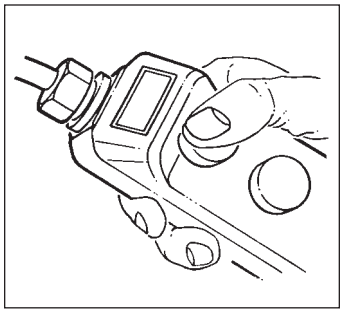

Remote Control:
Not for lifting personnel. Must be factory installed. For Battery or Electric AC operated lifts.
RC-10: One station. Weight 2 lbs.
RC-20: Two station. Weight 4 lbs.
FC-10: Foot control. Weight 15 lbs.

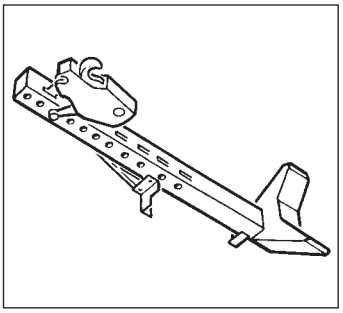

Drum Grab Handler DG30:
Automatically grabs 30 and 55 gallon drums for handling and stacking in a vertical position. Mounts on the backplate of any straddle fork model. Parrot-beak mechanism for steel and fibre drums.
DG-30: Weight 36 lbs.
DG-30PS: For Pallet Straddle Stacker. Weight 51 lbs.
(Not available for counterweight lifts.)

Fire Resistant Hydraulic Fluid:
water-glycol fluids are fire resistant, non-explosive and non-toxic. Approved by Factory Mutual Insurance Engineering Laboratories.

Presto LIFTS™

Scissor Lifts

Standard Duty Scissor Lifts

Model Number	Load Capacity	Lowered Height	Raised Height	End/Side Capacity	Std. Base & Platform	Maximum Platform	Lifting Speed	Standard. Motor	Std.Voltage/ Phase/Hz	Shipping Weight
XL - 24 Series - 24” Travel										
XL24-20	2000 lbs	7 1/4”	31”	2000	24” x 36”	48” x 60”	15 sec	1 H.P.	115/1/60	550 lbs
XL24-40	4000 lbs	7 1/4”	31”	4000	24” x 36”	48” x 60”	27 sec	1 H.P.	115/1/60	570 lbs
XL24-60	6000 lbs	7 1/4”	31”	4500	24” x 36”	48” x 60”	40 sec	1 H.P.	115/1/60	620 lbs
XL - 36 Series - 36” Travel										
XL36-20	2000 lbs	7 1/4”	43”	2000	24” x 48”	48” x 72”	17sec	1 H.P.	115/1/60	690 lbs
XL36-30	3000 lbs	7 1/4”	43”	3000	24” x 48”	48” x 72”	30 sec	1 H.P.	115/1/60	720 lbs
XL36-40	4000 lbs	7 1/4”	43”	3500	24” x 48”	48” x 72”	38 sec	1 H.P.	115/1/60	750 lbs
XL36-50	5000 lbs	7 1/4”	43”	3500	24” x 48”	48” x 72”	22 sec	1 1/2 H.P.	208,220,460/3/60	770 lbs
XL36-60	6000 lbs	7 1/4”	43”	3500	24” x 48”	48” x 72”	30 sec	1 1/2 H.P.	208,220,460/3/60	790 lbs
XL - 48 Series - 48” Travel										
XL48-20	2000 lbs	7 1/4”	55”	2000	24” x 64”	48” x 88”	19 sec	1 1/2 H.P.	208,220,460/3/60	850 lbs
XL48-40	4000 lbs	7 1/4”	55”	3500	24” x 64”	48” x 88”	32 sec	1 1/2 H.P.	208,220,460/3/60	900 lbs
XL48-60	6000 lbs	7 1/4”	55”	3500	24” x 64”	48” x 88”	39 sec	1 1/2 H.P.	208,220,460/3/60	950 lbs

Please specify voltage and control type when ordering

Features

- Oversized platforms available
- Standard hand control pendant
- Optional foot control available
- Easy to access internal power unit
- Lift time start at 8’ per minute
- Optional power units available
- Heavy duty hydraulic cylinders with chrome-plated rams
- Polyurethane seals on cylinders
- 3 1/2” safety table edge to protect operator from rollers
- 3/4” steel plate scissor legs
- Lifetime lubricated bearings on all rollers and pivot points
- Safety maintenance device
- Safety velocity fuses standard
- Hinged platform allows for easy access to cylinders and power unit in the collapsed position.
- 48” x 96” platform available
- Custom designs available

Scissor Lift options on pages 23

Shown with optional foot control

Wide Base Scissor Lifts

Model Number	Load Capacity	Lowered Height	Raised Height	End/Side Capacity	Std. Base & Platform	Maximum Platform	Lifting Speed	Standard Motor	Std.Voltage/ Phase/Hz	Shipping Weight
X3W Series - 24” Travel										
X3W24-20	2000 lbs	7 3/4”	31”	2000	36” x 36”	60” x 60”	30 sec	1 HP.	115/1/60	720 lbs
X3W24-40	4000 lbs	7 3/4”	31”	4000	36” x 36”	60” x 60”	32 sec	1 HP.	115/1/60	740 lbs
X3W24-60	6000 lbs	7 3/4”	31”	4500	36” x 36”	60” x 60”	34 sec	1 HP.	115/1/60	790 lbs
X3W Series - 36” Travel										
X3W36-20	2000 lbs	7 3/4”	43”	2000	36” x 48”	60” x 72”	44 sec	1 HP.	115/1/60	860 lbs
X3W36-40	4000 lbs	7 3/4”	43”	3500	36” x 48”	60” x 72”	46 sec	1 HP.	115/1/60	900 lbs
X3W36-60	6000 lbs	7 3/4”	43”	3500	36” x 48”	60” x 72”	26 sec	1 1/2 HP.	208,220,460/3/60	960 lbs
X3W Series - 48” Travel										
X3W48-20	2000 lbs	7 3/4”	55”	2000	36” x 64”	60” x 88”	32 sec	1 1/2 HP.	208,220,460/3/60	1020 lbs
X3W48-40	4000 lbs	7 3/4”	55”	3500	36” x 64”	60” x 88”	34 sec	1 1/2 HP.	208,220,460/3/60	1070 lbs
X3W48-60	6000 lbs	7 3/4”	55”	3500	36” x 64”	60” x 88”	38 sec	1 1/2 HP.	208,220,460/3/60	1120 lbs
X4W Series - 24” Travel										
X4W24-20	2000 lbs	7 3/4”	31”	2000	48” x 36”	72” x 60”	30 sec	1 HP.	115/1/60	810 lbs
X4W24-40	4000 lbs	7 3/4”	31”	4000	48” x 36”	72” x 60”	32 sec	1 HP.	115/1/60	830 lbs
X4W24-60	6000 lbs	7 3/4”	31”	4500	48” x 36”	72” x 60”	34 sec	1 HP.	115/1/60	880 lbs
X4W Series - 36” Travel										
X4W36-20	2000 lbs	7 3/4”	43”	2000	48” x 48”	72” x 72”	44 sec	1 HP.	115/1/60	950 lbs
X4W36-40	4000 lbs	7 3/4”	43”	3500	48” x 48”	72” x 72”	46 sec	1 HP.	115/1/60	990 lbs
X4W36-60	6000 lbs	7 3/4”	43”	3500	48” x 48”	72” x 72”	26 sec	1 1/2 HP.	208,220,460/3/60	1050 lbs
X4W Series - 48” Travel										
X4W48-20	2000 lbs	7 3/4”	55”	2000	48” x 64”	72” x 88”	32 sec	1 1/2 HP.	208,220,460/3/60	1110 lbs
X4W48-40	4000 lbs	7 3/4”	55”	3500	48” x 64”	72” x 88”	34 sec	1 1/2 HP.	208,220,460/3/60	1160 lbs
X4W48-60	6000 lbs	7 3/4”	55”	3500	48” x 64”	72” x 88”	38 sec	1 1/2 HP.	208,220,460/3/60	1250 lbs

Please specify voltage and control type when ordering

Scissor Lift options on pages 23

Light Duty Scissor Lifts

Light Duty Manual Scissor Lifts

Model Number	Load Capacity	Lowered Height	Raised Height	End/Side Capacity	Minimum Platform	Maximum Platform	Lifting Strokes	Shipping Weigh
XF24 Series								
XF24-10	1000 lbs	5 1/4”	29”	1000lbs	24”x36”	36”x42”	35	390 lbs
XF24-15	1500 lbs	5 1/4”	29”	1500lbs	24”x36”	36”x42”	55	395 lbs
XF36 Series								
XF36-10	1000 lbs	5 1/4”	41”	1000lbs	24”x48”	36”x54”	46	440 lbs
XF36-15	1500 lbs	5 1/4”	41”	1500lbs	24”x48”	36”x54”	69	455 lbs
WXF24 Series								
WXF24-10	1000 lbs	5 1/4”	29 1/4”	1000lbs	36”x36”	48”x42”	35	430 lbs
WXF24-15	1500 lbs	5 1/4”	29 1/4”	1500lbs	36”x36”	48”x42”	55	435 lbs
WXF36 Series								
WXF36-10	1000 lbs	5 1/4”	41 1/4”	1000lbs	36”x48”	48”x54”	46	480 lbs
WXF36-15	1500 lbs	5 1/4”	41 1/4”	1500lbs	36”x48”	48”x54”	69	485 lbs

Features

- Foot operated hydraulic pump provides lift
- Hand controlled release for lowering
- 1/2” steel plate scissor legs
- Lifetime lubricated bearings
- Wide base models
- Oversized & custom platforms available
- Hinged platform allows easy access to cylinders
- Chrome plated ram cylinders
- Custom designs available

Scissor Lift options on pages 23

Light Duty Electric Scissor Lifts

Model Number	Load Capacity	Lowered Height	Raised Height	End/Side Capacity	Minimum Platform	Maximum Platform	Lifting Speed	Shipping Weight
XS24 Series - 24” Travel - 24” W x 36” L Platform								
XS24-10	1000 lbs	5 1/4”	29”	1000	24”x36”	36”x48”	18 sec	390 lbs
XS24-15	1500 lbs	5 1/4”	29”	1500	24”x36”	36”x48”	23 sec	395 lbs
XS36 Series - 36” Travel - 24” W x 48” L Platform								
XS36-10	1000 lbs	5 1/4”	41”	1000	24”x48”	36”x60”	29 sec	425 lbs
XS36-15	1500 lbs	5 1/4”	41”	1500	24”x48”	36”x60”	36 sec	430 lbs
WXS24 Series - 24” Travel - 36” W x 36” L Platform								
WXS24-10	1000 lbs	5 1/4”	29 1/4”	1000	36”x36”	48”x48”	18 sec	430 lbs
WXS24-15	1500 lbs	5 1/4”	29 1/4”	1500	36”x36”	48”x48”	23 sec	435 lbs
WXS36 Series - 36” Travel - 36” W x 48” L Platform								
WXS36-10	1000 lbs	5 1/4”	41 1/4”	1000	36”x48”	48”x60”	29 sec	455 lbs
WXS36-15	1500 lbs	5 1/4”	41 1/4”	1500	36”x48”	48”x60”	36 sec	470 lbs

Features

- Standard hand control pendant
- Easy to service internal power unit
- Lift time start at 10’ per minute
- 1/2” steel plate scissor legs
- Lifetime lubricated bearings
- Powered up and down powered units
- Hinged platform allows for easy access to cylinders and power unit in the collapsed position.
- Custom designs available
- Internal 1/3 hp 115/1/60 power unit

Scissor Lift options on pages 23

Portable Scissor Lifts

Portable Manual Scissor Lifts

Model Number	Lift Capacity	Lowered Height	Raised Height	Standard Platform	Maximum Platform	Lifting Strokes	Shipping Weight
XP24 Series - 23” Travel							
XP24 - 300	300 lbs	10”	33”	20” x 32”	20” x 32”	12	290 lbs
XP24 - 600	600 lbs	10”	33”	20” x 32”	20” x 32”	25	310 lbs
XP24 Series - 24” Travel							
XP24 - 10	1000 lbs	9 1/4”	33”	24” x 36”	30” x 42”	35	460 lbs
XP24 - 15	1500 lbs	9 1/4”	33”	24” x 36”	30” x 42”	55	465 lbs
XP36 Series - 36” Travel							
XP36 - 10	1000 lbs	9 1/4”	45”	24” x 48”	30” x 54”	46	490 lbs
XP36 - 15	1500 lbs	9 1/4”	45”	24” x 48”	30” x 54”	69	495 lbs
WXP24 Series - 24” Travel							
WXP24-10	1000 lbs	9 1/4”	33 1/4”	36” x 36”	42” x 42”	35	500 lbs
WXP24-15	1500 lbs	9 1/4”	33 1/4”	36” x 36”	42” x 42”	55	515 lbs
WXP36 Series - 36” Travel							
WXP36-10	1000 lbs	9 1/4”	45 1/4”	36” x 48”	48” x 54”	46	530 lbs
WXP36-15	1500 lbs	9 1/4”	45 1/4”	36” x 48”	48” x 54”	69	535 lbs

Features

- Hand release for lowering
- Foot operated hydraulic pump
- 1/2” steel plate scissor legs
- Lifetime lubricated bearings
- Two fixed & two swivel 5” x 2” High impact phenolic casters
- Oversized & custom platforms available
- Hinged platform allows for access to cylinders
- Optional casters available
- Foot operated safety floor lock
- Custom designs available

Scissor Lift options on pages 23

Portable Electric Scissor Lifts

Model Number	Lift Capacity	Lowered Height	Raised Height	Standard Platform	Maximum Platform	Lifting Speed	Shipping Weight
XBP Series - 24” Travel							
XBP24 -10	1000 lbs	9 1/4”	33”	24” x 36”	24” x 36”	8 sec	520 lbs
XBP24 -15	1500 lbs	9 1/4”	33”	24” x 36”	24” x 36”	15 sec	525 lbs
XBP Series - 36” Travel							
XBP36 -10	1000 lbs	9 1/4”	45”	24” x 48”	30” x 54”	14 sec	550 lbs
XBP36 -15	1500 lbs	9 1/4”	45”	24” x 48”	30” x 54”	20 sec	565 lbs
WBP24 Series - 24” Travel							
WBP24 -10	1000 lbs	9 1/4”	33 1/4”	36” x 36”	42” x 42”	8 sec	510 lbs
WBP24 -15	1500 lbs	9 1/4”	33 1/4”	36” x 36”	42” x 42”	15 sec	515 lbs
WBP36 Series - 36” Travel							
WBP36 -10	1000 lbs	9 1/4”	45 1/4”	36” x 48”	48” x 54”	14 sec	540 lbs
WBP36 -15	1500 lbs	9 1/4”	45 1/4”	36” x 48”	48” x 54”	20 sec	545 lbs

Features

- Oversized platforms available
- Two fixed & two swivel 5” x 2” high impact phenolic casters
- Easy to service internal power unit
- 1/2” steel plate scissor legs
- Lifetime lubricated bearings
- 12 volt gel cell battery
- 5 amp built in battery charger
- Lift time start at 20’ per minute
- Optional power units available
- Hinged platform allows for easy access to cylinders and power unit in the collapsed position.
- Foot operated safety floor lock
- Powered up powered down
- Custom designs available

Scissor Lift options on pages 23

Double Scissor Lifts

Model Number	Load Capacity	Lowered Height	Raised Height	End/Side Capacity	Minimum Platform	Maximum Platform	Lifting Speed	Shipping Weight
DXS 30 Series - 30” Travel - 16” x 24”L Platform								
DXS30 - 5	500 lbs	6 3/4”	36 3/4”	500lbs	16”x24”	30”x36”	35 sec	350 lbs
DXS30 - 10	1000 lbs	6 3/4”	36 3/4”	1000lbs	16”x24”	30”x36”	37 sec	360 lbs
DXS 36 Series - 36” Travel - 24” x 36”L Platform								
DXS36 - 10	1000 lbs	7 1/2”	43 1/2”	1000lbs	24”x36”	36”x48”	40 sec	460 lbs
DXS36 - 15	1500 lbs	7 1/2”	43 1/2”	1500lbs	24”x36”	36”x48”	42 sec	480 lbs
DXS 48 Series - 48” Travel - 24” x 48”L Platform								
DXS48 - 10	1000 lbs	7 1/2”	55 1/2”	1000lbs	24”x48”	36”x60”	47 sec	600 lbs
DXS48 - 15	1500 lbs	7 1/2”	55 1/2”	1500lbs	24”x48”	36”x60”	48 sec	650 lbs

Features

- 500 - 1500 lb. capacities
- 30”, 36” & 48” vertical travel
- Standard hand control pendant
- Internal 1/3 hp 115/1/60 power unit
- DXS 30 -5/-10 powered up powered down
- DXS 36 -10/-15, DXS 48 -10/-15 powered up gravity down
- Lift time start at 5’ per minute
- Optional power units available
- Hinged platform allows for easy access to cylinders and power unit in the collapsed position.
- Custom designs available

Scissor Lift options on pages 23

Portable Double Scissor Lifts

Model Number	Lift Capacity	Lowered Height	Raised Height	Standard Platform	Maximum Platform	Lifting Speed	Shipping Weight
DBP Series - 30” Travel							
DBP30 - 10	1000 lbs	10 3/4”	40 3/4”	24” x 24”	30” x 30”	8 sec	470 lbs
DBP Series - 36” Travel							
DBP36 - 10	1000 lbs	11 3/4”	47 3/4”	24” x 36”	30” x 42”	14 sec	500 lbs
DBP36 - 15	1500 lbs	11 3/4”	47 3/4”	24” x 36”	30” x 42”	20 sec	515 lbs

Features

- 1000 - 1500 lb. capacity
- 24” & 36” vertical travel
- Oversized platforms available
- Easy to service internal power unit
- 12 volt gel cell battery
- 5 amp built in battery charger
- DXS 30 -5/-10 powered up powered down
- DXS 36 -10/-15, DXS 48 -10/-15 powered up gravity down
- Lift time start at 15’ per minute
- Optional power units available
- Foot operated floor lock
- Hinged platform allows for easy access to cylinders and power unit in the collapsed position.
- Custom designs available
- Two fixed & two swivel 5” x 2” High impact phenolic casters

Scissor Lift options on pages 23

Zero Lifts

Floor Level Lifts

Model Number	Lift Capacity	Platform Size	Lowered Height	Raised Height	Dimensions W/L	Lifting Speed	Shipping Weight
XZ44 Series							
XZ44 - 20	2000 lbs	44” x 48”	3/8”	33 3/8”	63” x 62”	40 sec	1175 lbs
XZ44 - 40	4000 lbs	44” x 48”	3/8”	33 3/8”	63” x 62”	44 sec	1180 lbs
XZ44 - 60	6000 lbs	44” x 48”	1/2”	33 1/2”	64” x 62”	54 sec	1255 lbs
XZ50 Series							
XZ50 - 20	2000 lbs	50” x 48”	3/8”	33 3/8”	69” x 62”	44 sec	1260 lbs
XZ50 - 40	4000 lbs	50” x 48”	3/8”	33 3/8”	69” x 62”	46 sec	1265 lbs
XZ50 - 60	6000 lbs	50” x 48”	1/2”	33 1/2”	70” x 62”	56 sec	1340 lbs

6,000 lb. capacity units have been priced as 3 phase only and include 2 GPM pmp.

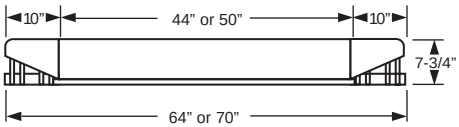

Features

- 2000 - 6000 lb. capacity
- 33” vertical travel
- Two standard platform sizes
- External 1 HP 115/1/60 power pack
- Optional power units available
- Foot or hand held control
- Floor level at lowered height, pallet truck accessible
- 6” flexible safety toe guard
- Lifting eyes for safely positioning unit
- Custom designs available

Floor Level Tilters

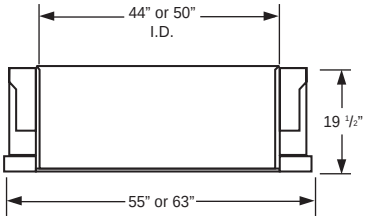

Model Number	Tilt Capacity	Degree of Tilt	Platform Size	Lowered Height	Dimensions W/L	Lifting Speed	Shipping Weight
TZ44 Series							
TZ44 - 20	2000 lbs	45	44” x 48”	3/8”	55” x 60 1/2”	30 sec	1200 lbs
TZ44 - 40	4000 lbs	45	44” x 48”	3/8”	55” x 60 1/2”	32 sec	1155 lbs
TZ44 - 60	6000 lbs	45	44” x 48”	1/2”	55” x 60 1/2”	36 sec	1235 lbs
TZ50 Series							
TZ50 - 20	2000 lbs	45	50” x 48”	3/8”	63” x 60 1/2”	30 sec	1215 lbs
TZ50 - 40	4000 lbs	45	50” x 48”	3/8”	63” x 60 1/2”	34 sec	1240 lbs
TZ50 - 60	6000 lbs	45	50” x 48”	1/2”	63” x 60 1/2”	38 sec	1340 lbs

6,000 lb. capacity units have been priced as 3 phase only and include 2 GPM pmp.

Features

- 2000 - 6000 lb. capacity
- 45 degree tilt
- Two standard platform sizes
- Floor level at lowered height, pallet jack accessible
- External 1 HP 115/1/60 power pack
- Optional power units available
- Hand control with magnetic back
- 6” flexible safety toe guard
- Custom design available
- Lifting eyes for safely positioning unit

Floor Level Container Tilters

Model Number	Tilt Capacity	Degree of Tilt	Platform Size	Lowered Height	Dimensions W/L	Lifting Speed	Shipping Weight
ZRT 50 Series							
ZRT50-20	2000 lbs	89	50”x48”	3/8”	59”x67”	26 sec	1245 lbs
ZRT50-40	4000 lbs	89	50”x48”	3/8”	59”x67”	28 sec	1295 lbs

Features

- 2000 - 4000 lb. capacity
- 89 degree tilt
- Custom platform sizes available
- Floor level at lowered height, pallet jack accessible
- Internal 1 HP 115/1/60 power pack
- Optional power units available
- Hand control with magnetic back
- 6” flexible safety toe guard
- Custom design available
- 50” I.D. x 30 1/8” side height

Presto LIFTS™

Container Tilters

Stationary Container Tilters

Model Number	Tilt Capacity	Degree of Tilt	Fork Length	Lowered Height	Dimensions W/L	Lifting Speed	Shipping Weight
SRT Series							
SRT20	2000 lbs	89	40”	3/8”	33”x58”	23 sec	885 lbs
SRT40	4000 lbs	89	40”	3/8”	33”x58”	24 sec	900 lbs

Features

- 2000 - 4000 lb. capacity
- 89 degree tilt
- Internal 1 HP 115/1/60 power pack
- Push-button hand held control with magnetic backing for mounting
- Optional foot control available
- Compact frame design
- Designed to be lagged down to floor
- Fork pockets allow for easy loading with a pallet jack or forklift
- Flexible safety toe guards on forks
- Custom designs available

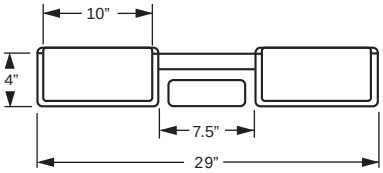

Portable Container Tilters

Model Number	Tilt Capacity	Degree of Tilt	Lowered Height	Fork Length	Fork O.D.	Dimensions W/L	Lifting Speed	Shipping Weight
PT Series - Non-Straddle								
PT - 20	2000 lbs	89	3 1/2”	42”	26 1/2”	34”x62”	26 sec	825 lbs
PT - 40	4000 lbs	89	3 1/2”	42”	26 1/2”	34”x62”	30 sec	840 lbs
PTS Series - 42” I.D. Straddle								
PTS42 - 20	2000 lbs	89	3 1/2”	42”	26 1/2”	48”x62”	26 sec	865 lbs
PTS42 - 40	4000 lbs	89	3 1/2”	42”	26 1/2”	48”x62”	30 sec	885 lbs
PTS Series - 50” I.D. Straddle								
PTS50 - 20	2000 lbs	89	3 1/2”	42”	26 1/2”	52”x62”	26 sec	880 lbs
PTS50 - 40	4000 lbs	89	3 1/2”	42”	26 1/2”	52”x62”	30 sec	900 lbs

Features

- 2000 - 4000 lb. capacities
- 89 degree tilt
- Straddle models for pallets and containers
- Non-straddle models for skids and baskets
- Easy to service internal 1 HP DC motor
- Optional 115 volt AC or air motors available
- Push-button control with magnetic backing
- External 10 amp tapering batter charger
- Presto foot operated floor lock
- 12 volt maintenance free, leak-proof gel cell battery
- Push handle lowers when in use
- Custom designs available

Tilt Tables

Standard Tilt Tables

Model Number	Tilt Capacity	Degree of Tilt	Lowered Height	Standard Base	Standard Platform	Maximum Platform	Lifting Speed	Shipping Weight
TT30 Series								
TT30 - 10	1000 lbs	30	6 1/2”	24”x30”	24”x36”	36”x48”	15 sec	310 lbs
TT30 - 15	1500 lbs	30	6 1/2”	24”x30”	24”x36”	36”x48”	15 sec	325 lbs
TT30 - 20	2000 lbs	30	7 1/2”	24”x36”	24”x36”	50”x50”	10 sec	530 lbs
TT30 - 40	4000 lbs	30	7 1/2”	24”x36”	24”x36”	50”x50”	11 sec	520 lbs
TT30 - 60	6000 lbs	30	7 1/2”	24”x36”	24”x36”	50”x50”	14 sec	530 lbs
TT45 Series								
TT45 - 10	1000 lbs	45	6 1/2”	24”x30”	24”x36”	36”x48”	22 sec	340 lbs
TT45 - 15	1500 lbs	45	6 1/2”	24”x30”	24”x36”	36”x48”	22 sec	325 lbs
TT45 - 20	2000 lbs	45	7 1/2”	24”x36”	24”x36”	50”x50”	15 sec	510 lbs
TT45 - 40	4000 lbs	45	7 1/2”	24”x36”	24”x36”	50”x50”	16 sec	520 lbs
TT45 - 60	6000 lbs	45	7 1/2”	24”x36”	24”x36”	50”x50”	20 sec	530 lbs
TT60 Series								
TT60 - 10	1000 lbs	60	6 1/2”	24”x30”	24”x36”	36”x48”	30 sec	310 lbs
TT60 - 15	1500 lbs	60	6 1/2”	24”x30”	24”x36”	36”x48”	30 sec	325 lbs

Please specify voltage and control type when ordering

Features

- 1000 - 6000 lb. capacity
- 30, 45 & 60 degree tilt
- Internal 1/2 HP 115/1/60 power unit.
- Optional power units available
- Powered down cylinders on TT60 Series
- Custom platforms available
- 8” standard lip, optional lips up to 24”
- 12” lip standard on TT-60 series tilters
- TT-30 & TT-45 units can be mounted to the floor, on floor stands or on top of scissor lifts
- Hand held control with 8’ coil cord
- Optional foot control available

Tilt Tables options on pages 23

Shown with optional 12” floor stand

Wide Base Tilt Tables

Model Number	Tilt Capacity	Degree of Tilt	Lowered Height	Standard Base	Standard Platform	Maximum Platform	Lifting Speed	Shipping Weight
WT30/45 Series								
WT30/45-20	2000 lbs	30/45	7 1/2”	36” x 42”	36” x 42”	60” x 60”	19/29 sec	590 lbs
WT30/45-40	4000 lbs	30/45	7 1/2”	36” x 42”	36” x 42”	60” x 60”	20/30 sec	610 lbs
WT30/45-60	6000 lbs	30/45	7 1/2”	36” x 42”	36” x 42”	60” x 60”	29/39 sec	630 lbs
WT60 Series								
WT60-20	2000 lbs	60	8 1/2”	36” x 42”	36” x 42”	60” x 60”	40 sec	730 lbs
WT60-40	4000 lbs	60	8 1/2”	36” x 42”	36” x 42”	60” x 60”	42 sec	750 lbs
WT60-60	6000 lbs	60	8 1/2”	36” x 42”	36” x 42”	60” x 60”	55 sec	770 lbs
WT90 Series								
WT90-20	2000 lbs	90	8 1/2”	36” x 42”	36” x 42”	60” x 60”	60 sec	730 lbs
WT90-40	4000 lbs	90	8 1/2”	36” x 42”	36” x 42”	60” x 60”	64 sec	750 lbs
WT90-60	6000 lbs	90	8 1/2”	36” x 42”	36” x 42”	60” x 60”	83 sec	770 lbs

Please specify voltage and control type when ordering

Features

- 2000 - 6000 lb. capacity
- 30, 45, 60 & 90 degree tilt
- Internal 1 HP 115/1/60 power unit.
- Optional power units available
- Powered down cylinders on WT60 and WT90 Series
- Custom platforms available
- 8” standard lip, optional lips up to 24”
- 12” lip standard on WT-60 and WT-90 Series tilters
- WT-30 & WT-45 units can be mounted to the floor, on floor stands or on top of scissor lifts
- Hand held control with 8’ coil cord
- Optional foot control available

Tilt Tables options on pages 23

Lift & Tilt Combination

Floor Level Lift & Tilt

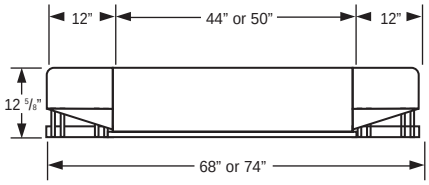

Model Number	Load Capacity	Platform Size	Lowered Height	Lifting Height	Dimensions W /L	Lifting Speed	Shipping Weight
XZT 44 Series							
XZT44 - 20	2000 lbs	44” x 48”	3/8”	33 3/8”	68” x 61”	39 sec	1345 lbs
XZT44 - 40	4000 lbs	44” x 48”	1/2”	33 1/2”	68” x 61”	43 sec	1420 lbs
XZT 50 Series							
XZT50 - 20	2000 lbs	50” x 48”	3/8”	33 3/8”	74” x 61”	40 sec	1420 lbs
XZT50 - 40	4000 lbs	50” x 48”	1/2”	33 1/2”	74” x 61”	44 sec	1515 lbs

Features

- 2000 - 4000 lb. capacity
- 33” vertical travel
- 30 degree tilt
- Standard pedestal control
- Optional foot control available
- External 1 HP 115/1/60 power unit
- Optional power units available
- Floor level lowered height
- No ramps or pit required
- Custom designs available
- One power unit controls lift & tilt
- 3 Phase available

Tilt Tables options on pages 23

Scissor Lift & Tilt

Model Number	Lift Capacity	Lowered Height	Raised Height	Standard Base	Maximum Platform	Lifting Speed	Tilting Speed	Shipping Weight
X3WT Series								
X3WT36-20	2000 lbs	11 1/2”	47 1/2”	36” x 48”	60” x 60”	42 sec	8 sec	1370 lbs
X3WT36-40	4000 lbs	11 1/2”	47 1/2”	36” x 48”	60” x 60”	43 sec	8 sec	1420 lbs
X4WT Series								
X4WT36-20	2000 lbs	11 1/2”	47 1/2”	48” x 48”	72” x 60”	42 sec	8 sec	1450 lbs
X4WT36-40	4000 lbs	11 1/2”	47 1/2”	48” x 48”	72” x 60”	43 sec	8 sec	1500 lbs

Features

- 2000 - 4000 lb. capacity
- 11 1/2” lowered height
- Optional push-button control w/ 8’ coil cord
- Standard pedestal control
- Optional foot control available
- Internal 1 HP 115/1/60 power unit
- One power unit controls lift & tilt
- Independent lift & tilt functions
- 30 & 45 degree tilts
- Custom Designs available
- 3 Phase available

Tilt Tables options on pages 23

Shown with standard pedestal control

Post Lift Tables

Post Lift Tables

Model Number	Lift Capacity	Lowered Height	Raised Height	Platform Size	Shipping Weight
P18 Series - Foot operated Tables					
P18 - 10	1000 lbs	31”	49”	20” x 30”	290 lbs
P18 - 20	2000 lbs	31”	49”	24” x 36”	300 lbs
P18 - 40	4000 lbs	31”	49”	24” x 36”	315 lbs
P12 Series - Foot operated Tables					
P12 - 10	1000 lbs	25”	37”	20” x 30”	240 lbs
P12 - 20	2000 lbs	25”	37”	24” x 36”	250 lbs
P12 - 40	4000 lbs	25”	37”	24” x 30”	260 lbs
BP-18 Series - Battery Operated					
BP18 - 10	1000 lbs	34”	52”	20” x 30”	370 lbs
BP18 - 20	2000 lbs	34”	52”	24” x 36”	430 lbs
BP-12 Series - Battery Operated					
BP12 - 10	1000 lbs	25”	37”	20” x 30”	270 lbs
BP12 - 20	2000 lbs	25”	37”	24” x 36”	310 lbs

Features

- 1000- 4000 lbs capacity
- Foot operated hydraulic pump on P series
- 12 volt DC screw drive linear actuator on Battery Operated Series
- Foot operated floor lock
- Push-button control on BP series
- Integrated push/pull handle
- 2 fixed and 2 swivel casters with high impact phenolic wheels

Mechanical Post Lift Tables

Model Number	Lift Capacity	Lowered Height	Raised Height	Platform Size	Shipping Weight
P Series					
P2436	2000 lbs	24”	42”	24” x 36”	400 lbs
P2442	2000 lbs	24”	42”	24” x 42”	430 lbs
P2448	2000 lbs	24”	42”	24” x 48”	460 lbs
P2460	2000 lbs	24”	42”	24” x 60”	525 lbs
P3036	2000 lbs	24”	42”	30” x 36”	445 lbs
P3042	2000 lbs	24”	42”	30” x 42”	485 lbs
P3048	2000 lbs	24”	42”	30” x 48”	525 lbs
P3060	2000 lbs	24”	42”	30” x 60”	600 lbs

Height Modification		
Lowered Height	Raised Height	Maximum Travel
(a) 18”	30”	12”
(a) 20”	34”	14”
(a) 22”	38”	16”
(a) 26”	44”	18”
(a) 28”	46”	18”
(a) 30”	48”	18”
(a) 32”	50”	18”
(b) 36”	54”	18”
(b) 40”	58”	18”
(b) 42”	60”	18”

(a) applies to all tables
(b) applies to 30” or wide tables

Features

- 2000 lbs capacity
- 42” raised height
- Four self locking acme screw posts
- Custom raised height
- Two speed crank shaft for raising & lowering
- Foot operated floor lock
- Optional push/pull handle for transporting
- Custom platforms available
- 2 fixed and 2 swivel casters with high impact phenolic wheels

Hydraulic Cantilever Table

Model Number	Lift Capacity	Lowered Height	Raised Height	Platform Size W/L	Shipping Weight
PL - Post Lift Tables					
PL36	2000 lbs	24”	36”	24” x 36”	395 lbs
PL48	2000 lbs	30”	48”	24” x 36”	515 lbs
PL60	2000 lbs	36”	60”	24” x 36”	535 lbs

Features

- 2000 lb. capacity
- Dual floor locks
- Raised height to 60”
- Lowered height to 24”
- 2 fixed and 2 swivel casters with high impact phenolic wheels
- Foot operated hydraulic pump
- Tip toe release for lowering

Presto LIFTS™

Hydraulic Lift & Tilt Options

Mechanical Options

Description and Specification
Oversized Platform - platforms can be increased in width and length up to additional 24". Side and end load capacities are derated 2% per inch of increase and oversized models must be lagged to the floor.
Platform with Beveled Edges - welded at 30 degree angles, increases the standard platform by 4" on all sides
Electro-Mechanical Toe Guard - mounted to the under side of the platform, adds 4" on all sides
Pit Mounted Units - for ground level applications require either a Platform with Beveled Edges or Electro-Mechanical Toe Guards. Lifting Eyes required for installation and External Motor recommended.
Lifting Eyes - provided for installation and transporting of unit with a sling or lifting chain
Portable Units - wheeled dolly handle and two 5" fixed wheels (specify side or end mounting) for moving empty lifts. Overall lowered height is not changed when unit is in an operating position. XL models X3W and X4W models Oversized Platform & other models
Transportable Units - 6" steel casters, two fixed and two swivel, and a Presto floor lock mounted underneath base frame. Adds 10 1/4" to the lowered height XL models X3W and X4W models Oversized Platform & other models
V Grooved Wheels - 5" steel wheels for Transportable Units only, sold per pair.
Fork Pockets - used for moving scissor lifts between work stations.
Ball Transfer Tops - for multi directional movement of work loads, available for all load weights. Adds 2 3/4" to overall lowered height.

Description and Specification
Turntables - constructed of 1/2" steel plate and mounted on a 24" x 24" base plate equipped with a pivot pin captured bearing and four 1 3/4 cam followers. Base has mounting holes for lagging unit to table top, floor stand, floor mounting available. Capacities conform to desired work load. Note: Turntables add 2 3/4" to overall height. 36" round, shipping weight 200 lbs 36" square, shipping weight 225 lbs 48" round, shipping weight 350 lbs 48" square, shipping weight 380 lbs Heavy duty & custom designs available
Detent Stops - spring activated stops for a Turntable, standard stops positioned at 90 degree increments Spring
Conveyor Top - mounted to the lift table platform these 1.9" diameter rollers on 3" center have a 1000 lb capacity per linear foot. Adds 4" to overall height 24" x 36" platform 24" x 48" platform 24" x 64" platform Custom sizes and designs available
Conveyor Sides - used to retain product on conveyor tops, recommend on all Transporting Units. Fixed 3" sides Movable 3" sides
Optional Top Material - for special handling of loads, v tops, aluminum material, stainless steel, diamond plate, etc.
Accordion (Bellow) Skirts - designed to cover to scissor leg assemble of the lift table. XL 24 Series XL 36 Series XL 48 Series Other Models

Hydraulic Options

Description and Specification
External / Remote Power Units - all three phase units include transformer for low voltage control, 6' of hose and a mounting stand.
1 HP Single Phase - (115-230v/1/60)
Convert 1 PH to 1 1/2 HP Three Phase - (208, 220 or 460/3/60)
External 5 HP Three Phase - (208, 220, or 460/3/60)
1 1/2 HP Three Phase - (575/3/60)
Air Motors
Custom Designed
Fire Resistant Hydraulic Fluid - water-glycol fluids are fire resistant, non-explosive and non-toxic. Approved by Factory Mutual Insurance Engineering Laboratories
Low temp oil

Electrical Options

Description and Specification
Hand Operated NEMA 12 - control with an 8' cord is standard.
Hand Operated NEMA 4 - weather resistant control with an 8' cord. Substituted for NEMA 12 Additional controller
NEMA -1 Foot Control - foot operated control Substituted for NEMA 12 Hand Control Additional controller
Hand Held NEMA 4 with 20' Coil Cord Substituted for NEMA 12 Hand Control Additional controller
Wall Mounted Control
Limit Switch - Limits the vertical travel of the scissor lift.
Pedestal Mounted Controls - NEMA 12 controller mounted on a rugged steel stand with momentary push buttons
Velocity Fuse - standard safety feature on all Presto scissor lifts, prevents the unit from collapsing in the event of a hydraulic pressure loss.

Pneumatic Scissor Lifts

Pneumatic Scissor Lifts

Model Number	Lift Capacity	Vertical Travel	Lowered Height	Raised Height	Base Size W / L	Platform Size W / L	Shipping Weight
AX10 Series							
AX10 - 3648	1000 lbs	21”	8”	29”	36” x 48”	36” x 48”	820 lbs
AX10 - 4848	1000 lbs	21”	8”	29”	36” x 48”	48” x 48”	890 lbs
AX10 - 4856	1000 lbs	21”	8”	29”	36” x 48”	56” x 48”	935 lbs
AX10 - 4860	1000 lbs	21”	8”	29”	36” x 48”	60” x 48”	960 lbs
AX20 Series							
AX20 - 3648	2000 lbs	24”	8”	32”	36” x 48”	36” x 48”	855 lbs
AX20 - 4848	2000 lbs	24”	8”	32”	36” x 48”	48” x 48”	915 lbs
AX20 - 4856	2000 lbs	24”	8”	32”	36” x 48”	56” x 48”	955 lbs
AX20 - 4860	2000 lbs	24”	8”	32”	36” x 48”	60” x 48”	1040 lbs
AX40 Series							
AX40 - 4848	4000 lbs	24”	8”	32”	48” x 48”	48” x 48”	1040 lbs
AX40 - 4856	4000 lbs	24”	8”	32”	48” x 48”	56” x 48”	1115 lbs
AX40 - 4860	4000 lbs	24”	8”	32”	48” x 48”	60” x 48”	1135 lbs

Features

- 1000 - 4000 lb. capacity
- 21” & 24” travel
- 8” lowered height
- 32” raised height
- Air requirements - 80 psi @ 15 cfm
- Safety pressure relief valve standard
- Lifetime warranty on Firestone Actuator
- Standard pedestal control
- Optional foot or hand control
- AX units designed for stationary use must be lagged to the floor
- Custom platforms available

Pneumatic options on page 28

Heavy Duty Pneumatic Scissor Lifts

Model Number	Lift Capacity	Vertical Travel	Lowered Height	Raised Height	Base Size W / L	Platform Size W / L	Shipping Weight
AXS20 Series							
AXS20 - 3648	2000 lbs	24”	12”	36”	36” x 48”	36” x 48”	855 lbs
AXS20 - 4848	2000 lbs	24”	12”	36”	36” x 48”	48” x 48”	915 lbs
AXS20 - 4856	2000 lbs	24”	12”	36”	36” x 48”	56” x 48”	955 lbs
AXS20 - 4860	2000 lbs	24”	12”	36”	36” x 48”	60” x 48”	1040 lbs
AXS40 Series							
AXS40 - 3648	4000 lbs	24”	12”	36”	36” x 48”	36” x 48”	1020 lbs
AXS40 - 4848	4000 lbs	24”	12”	36”	36” x 48”	48” x 48”	1040 lbs
AXS40 - 4856	4000 lbs	24”	12”	36”	36” x 48”	56” x 48”	1115 lbs
AXS40 - 4860	4000 lbs	24”	12”	36”	36” x 48”	60” x 48”	1135 lbs
AXS60 Series							
AXS60 - 4848	6000 lbs	24”	12”	36”	48” x 48”	48” x 48”	1170 lbs
AXS60 - 4856	6000 lbs	24”	12”	36”	48” x 48”	56” x 48”	1315 lbs
AXS60 - 4860	6000 lbs	24”	12”	36”	48” x 48”	60” x 48”	1335 lbs
AXS80 Series							
AXS80 - 4848	8000 lbs	24”	12”	36”	48” x 48”	48” x 48”	1340 lbs
AXS80 - 4856	8000 lbs	24”	12”	36”	48” x 48”	56” x 48”	1415 lbs
AXS80 - 4860	8000 lbs	24”	12”	36”	48” x 48”	60” x 48”	1435 lbs

Features

- 2000 - 8000 lb. capacity
- 24” travel
- 36” raised heights
- Air requirements 80 psi @ 15 cfm
- Lifetime warranty on Firestone Actuator
- Safety pressure relief valve standard
- Standard pedestal control
- Optional foot or hand control
- AXS units available in transportable version
- No floor lagging necessary
- Custom platforms available

Pneumatic options on page 28

Pneumatic Tilt Tables

Model Number	Tilt Capacity	Degree of Tilt	Lowered Height	Base Size W / L	Platform Size W / L	Shipping Weight
AT10 Series						
AT10 - 3648	1000 lbs	30	7”	36” x 48”	36” x 48”	640 lbs
AT10 - 4848	1000 lbs	30	7”	36” x 48”	48” x 48”	700 lbs
AT10 - 4856	1000 lbs	30	7”	36” x 48”	56” x 48”	750 lbs
AT10 - 4860	1000 lbs	30	7”	36” x 48”	60” x 48”	770 lbs
AT20 Series						
AT20 - 3648	2000 lbs	30	7”	36” x 48”	36” x 48”	690 lbs
AT20 - 4848	2000 lbs	30	7”	36” x 48”	48” x 48”	770 lbs
AT20 - 4856	2000 lbs	30	7”	36” x 48”	56” x 48”	835 lbs
AT20 - 4860	2000 lbs	30	7”	36” x 48”	60” x 48”	855 lbs
AT40 Series						
AT40 - 4848	4000 lbs	30	7”	36” x 48”	48” x 48”	795 lbs
AT40 - 4856	4000 lbs	30	7”	36” x 48”	56” x 48”	850 lbs
AT40 - 4860	4000 lbs	30	7”	36” x 48”	60” x 48”	880 lbs
AT60 Series						
AT60 - 4848	6000 lbs	30	8”	48” x 48”	48” x 48”	890 lbs
AT60 - 4856	6000 lbs	30	8”	48” x 48”	56” x 48”	970 lbs
AT60 - 4860	6000 lbs	30	8”	48” x 48”	60” x 48”	1040 lbs

Features

- 2000 - 6000 lb. capacity
- 30 degree tilt
- Air requirements 80 psi @ 15 cfm
- Standard pedestal control
- Foot or hand control available
- Optional floor stand available
- Safety pressure relief valve standard
- Safety restraining chain to guard against over tilt
- Optional fork pockets
- Lifetime warranty on Firestone Actuator
- Optional motion stabilizer
- Custom designs available
- 35º & 45º tilt available, consult sales

Pneumatic options on page 28

Pallet Positioner

Model Number	Lift Capacity	Base Size W / L	Vertical Travel	Lowered Height	Raised Height	Platform Size	Shipping Weight
AccuLoad Series							
AL - 30	3000 lbs	24” x 48”	21”	9 1/4”	30 1/4”	43” dia.	500 lbs

Features

- 3000 lb. holding cap., 1500 lb. lifting cap.
- 21” vertical travel
- Foot Control standard
- Optional pedestal control available
- Safety pressure relief valve standard
- 3/8” x 43” solid rotating platform
- Lifetime warranty on Firestone Actuator
- Optional portability package available
- Air requirements 80 psi @ 15 cfm
- Custom platforms available

Pneumatic options on page 28

Pneumatic Lift & Tilt

Pneumatic Scissor Lift & Tilt

Model Number	Lift Capacity	Degree of Tilt	Vertical Travel	Lowered Height	Raised Height	Base Size W / L	Platform Size W /L	Shipping Weight
AXT10 Series								
AXT10 - 3648	1000 lbs	30	21”	15”	36”	36” x 48”	36” x 48”	1190 lbs
AXT10 - 4848	1000 lbs	30	21”	15”	36”	36” x 48”	48” x 48”	1300 lbs
AXT10 - 4856	1000 lbs	30	21”	15”	36”	36” x 48”	56” x 48”	1390 lbs
AXT10 - 4860	1000 lbs	30	21”	15”	36”	36” x 48”	60” x 48”	1440 lbs
AXT20 Series								
AXT20 - 3648	2000 lbs	30	24”	15”	39”	36” x 48”	36” x 48”	1365 lbs
AXT20 - 4848	2000 lbs	30	24”	15”	39”	36” x 48”	48” x 48”	1395 lbs
AXT20 - 4856	2000 lbs	30	24”	15”	39”	36” x 48”	56” x 48”	1450 lbs
AXT20 - 4860	2000 lbs	30	24”	15”	39”	36” x 48”	60” x 48”	1540 lbs
AXT40 Series								
AXT40 - 4848	4000 lbs	30	24”	15”	39”	48” x 48”	48” x 48”	1540 lbs
AXT40 - 4856	4000 lbs	30	24”	15”	39”	48” x 48”	56” x 48”	1595 lbs
AXT40 - 4860	4000 lbs	30	24”	15”	39”	48” x 48”	60” x 48”	1635 lbs

Features

- 1000 - 4000 lb. capacity
- 21” & 24” vertical travel
- 30 degree tilt
- Standard pedestal control
- Optional foot or hand control
- Safety pressure relief valve standard
- Lifetime warranty on Firestone Actuator
- Lifetime warranty on Firestone Actuator
- Air requirements 80 psi @ 15 cfm
- AXT units designed for stationary use must be lagged to the floor
- Optional motion stabilizer
- Custom designs available
- 35º & 45º tilt available, consult Presto sales

Pneumatic options on page 28

Heavy Duty Pneumatic Scissor Lift & Tilt

Model Number	Lift Capacity	Degree of Tilt	Vertical Travel	Lowered Height	Raised Height	Base Size W / L	Platform Size W /L	Shipping Weight
AXST20 Series								
AXST20-3648	2000 lbs	30	24”	19”	43”	36” x 48”	36” x 48”	1200 lbs
AXST20-4848	2000 lbs	30	24”	19”	43”	36” x 48”	48” x 48”	1320 lbs
AXST20-4856	2000 lbs	30	24”	19”	43”	36” x 48”	56” x 48”	1460 lbs
AXST20-4860	2000 lbs	30	24”	19”	43”	36” x 48”	60” x 48”	1540 lbs
AXST40 Series								
AXST40-3648	4000 lbs	30	24”	19”	43”	36” x 48”	36” x 48”	1450 lbs
AXST40-4848	4000 lbs	30	24”	19”	43”	36” x 48”	48” x 48”	1570 lbs
AXST40-4856	4000 lbs	30	24”	19”	43”	36” x 48”	56” x 48”	1690 lbs
AXST40-4860	4000 lbs	30	24”	19”	43”	36” x 48”	60” x 48”	1770 lbs
AXST60 Series								
AXST60-4848	6000 lbs	30	24”	19”	43”	48” x 48”	48” x 48”	1660 lbs
AXST60-4856	6000 lbs	30	24”	19”	43”	48” x 48”	56” x 48”	1780 lbs
AXST60-4860	6000 lbs	30	24”	19”	43”	48” x 48”	60” x 48”	1860 lbs
AXST80 Series								
AXST80-4848	8000 lbs	30	23”	20”	43”	48” x 48”	48” x 48”	1735 lbs
AXST80-4856	8000 lbs	30	23”	20”	43”	48” x 48”	56” x 48”	1850 lbs
AXST80-4860	8000 lbs	30	23”	20”	43”	48” x 48”	60” x 48”	1930 lbs

Features

- 2000 - 8000 lb. capacity
- 24” travel
- 30 degree tilt
- Air requirements 80 psi @ 15 cfm
- Safety pressure relief valve standard
- Lifetime warranty on Firestone Actuator
- Standard pedestal control
- Optional foot or hand control
- Custom platforms available
- 35º & 45º tilt available, consult Presto sales

Pneumatic options on page 28

Pneumatic Scissor Lifts & Rotate

Shown with optional accordion skirting

Model Number	Lift Capacity	Vertical Travel	Lowered Height	Raised Height	Base Size W / L	Platform Size W /L	Shipping Weight
AXR10 Series							
AXR10 - 3648	1000 lbs	21”	11”	32”	36” x 48”	36” x 48”	1055 lbs
AXR10 - 4848	1000 lbs	21”	11”	32”	36” x 48”	48” x 48”	1185 lbs
AXR10 - 4856	1000 lbs	21”	11”	32”	36” x 48”	56” x 48”	1280 lbs
AXR10 - 4860	1000 lbs	21”	11”	32”	36” x 48”	60” x 48”	1320 lbs
AXR20 Series							
AXR20 - 3648	2000 lbs	24”	11”	35”	36” x 48”	36” x 48”	1155 lbs
AXR20 - 4848	2000 lbs	24”	11”	35”	36” x 48”	48” x 48”	1295 lbs
AXR20 - 4856	2000 lbs	24”	11”	35”	36” x 48”	56” x 48”	1385 lbs
AXR20 - 4860	2000 lbs	24”	11”	35”	36” x 48”	60” x 48”	1450 lbs
AXR40 Series							
AXR40 - 4848	4000 lbs	24”	11”	35”	48” x 48”	48” x 48”	1420 lbs
AXR40 - 4856	4000 lbs	24”	11”	35”	48” x 48”	56” x 48”	1550 lbs
AXR40 - 4860	4000 lbs	24”	11”	35”	48” x 48”	60” x 48”	1595 lbs

Features

- 1000 - 4000 lb. capacity
- 21” & 24” vertical travel
- Turntable
- Standard pedestal control
- Optional foot control
- Safety pressure relief valve standard
- Lifetime warranty on Firestone Actuator
- Air requirements 80 psi @ 15 cfm
- AXR units designed for stationary use
- Optional Turret bearing system
- Custom designs available

Pneumatic options on page 28

Heavy Duty Pneumatic Scissor Lift & Rotate

Model Number	Lift Capacity	Vertical Travel	Lowered Height	Raised Height	Base Size W / L	Platform Size W /L	Shipping Weight
AXSR20 Series							
AXSR20-3648	2000 lbs	24”	15”	39”	36” x 48”	36” x 48”	1155 lbs
AXSR20-4848	2000 lbs	24”	15”	39”	36” x 48”	48” x 48”	1295 lbs
AXSR20-4856	2000 lbs	24”	15”	39”	36” x 48”	56” x 48”	1385 lbs
AXSR20-4860	2000 lbs	24”	15”	39”	36” x 48”	60” x 48”	1450 lbs
AXSR40 Series							
AXSR40-3648	4000 lbs	24”	15”	39”	36” x 48”	36” x 48”	1370 lbs
AXSR40-4848	4000 lbs	24”	15”	39”	36” x 48”	48” x 48”	1420 lbs
AXSR40-4856	4000 lbs	24”	15”	39”	36” x 48”	56” x 48”	1550 lbs
AXSR40-4860	4000 lbs	24”	15”	39”	36” x 48”	60” x 48”	1595 lbs
AXSR60 Series							
AXSR60-4848	6000 lbs	24”	15”	39”	48” x 48”	48” x 48”	1620 lbs
AXSR60-4856	6000 lbs	24”	15”	39”	48” x 48”	56” x 48”	1750 lbs
AXSR60-4860	6000 lbs	24”	15”	39”	48” x 48”	60” x 48”	1795 lbs
AXSR80 Series							
AXSR80-4848	8000 lbs	24”	15”	39”	48” x 48”	48” x 48”	1720 lbs
AXSR80-4856	8000 lbs	24”	15”	39”	48” x 48”	56” x 48”	1850 lbs
AXSR80-4860	8000 lbs	24”	15”	39”	48” x 48”	60” x 48”	1895 lbs

Features

- 2000 - 8000 lb. capacity
- 24” travel
- Turntable
- Air requirements 80 psi @ 15 cfm
- Lifetime warranty on Firestone Actuator
- Optional Turret bearing system
- Safety pressure relief valve standard
- Standard pedestal control
- Optional foot or hand control
- AXSR units available in transportable version
- No floor lagging necessary
- Oversized turntables available
- Custom design available

Pneumatic options on page 28

Pneumatic Options

Mechanical Options

Description and Specification
Oversized Platform - platforms can be increased in width and length up to additional 24”. Side and end load capacities are derated 2% per inch of increase and oversized models must be lagged to the floor.
Platform with Beveled Edges - welded at 30 degree angles, increases the standard platform by 4” on all sides
Pit Mounted Units - for ground level applications require a Platform with Beveled Edges. Lifting Eyes required for installation.
Lifting Eyes - provided for installation and transporting of unit with a sling or lifting chain
Portable Units - wheeled dolly handle and two 5” fixed wheels (specify side or end mounting) for moving empty lifts. Overall lowered height is not changed when unit is in an operating position. Only available on AXS, AXSR, and AXST Oversized Platform
Transportable Units - 6” steel casters, two fixed and two swivel, and a Presto floor lock mounted underneath base frame. Adds 9 3/4” to the lowered height. Only available on AXS, AXSR, and AXST. Oversized Platform
V Grooved Wheels - 5” steel wheels for Transportable Units only, sold per pair.
Floor Stands - designed to increase the lowered height of tilters
Motion Stabilizer - reduces the “bounce” found in pneumatic tilt tables.
Heavy-duty turntables available

Description and Specification
Detent Stops - manual or spring activated stops for a Turntable, standard stops positioned at 90 degree increments Spring
Positioning Lock - Pneumatically actuated lock for turntable tops, securely locks the turntable in any position. Must be used in conjunction with a Turret bearing system.
Conveyor Top - mounted to the lift table platform these 1.9” diameter rollers on 3” center have a 1000 lb capacity per linear foot. Adds 4” to overall height
Optional Top Material - for special handling of loads, v tops, aluminum material, stainless steel, diamond plate, etc.
Accordion (Bellows) Skirts - designed to cover the scissor leg assembly of the lift table.
Fork Pockets - used for moving scissor lifts between work stations.
Increased Vertical Travel - can be achieved by stacking two air bags, call with your application.
Degree of Tilt - can be increased on pneumatic tilts by stacking two air lifts, call with you application.

Presto Lifts' Sales Policies

Pricing Policy

Presto Lifts' prices are subject to change without notice. Presto Lifts also reserves the right to alter product specifications, designs and shipping weight without prior notice. The customer service staff is available to provide written quotations for all standard products, modification options or specialty-engineered products.

Credit Policy

Standard terms of payment are net 30 days from day of invoice with approved credit. Terms for specialty designed products are 1/3 non-refundable payment with the order and 2/3 payment net 30 days from date of invoice. New dealers may be required to prepay their first order prior to shipment. Presto Lifts will not release any orders to dealers who have outstanding balance over 60 days or more. We reserve the right to charge a 1 1/2% late charge on out standing balances over 30 days.

Shipping Policy

All products are shipped F.O.B. Factory. Freight charges will be "Third Party Bill" by carrier, unless freight collect is specified. Parts order weighing 70 lbs or less UPS ground, pre-pay & add, unless otherwise requested. Part orders greater that 70 lbs will be shipped common carrier. Published shipping weights may fluctuate due to options and/or packaging material.

Presto Lifts is not responsible for loss or damage in transit. It is the responsibility of the receiver (consignee) to inspect for damage, and file claims against the carrier. Presto Lifts will assist consignee whenever possible in filing for claims.

Order Change Policy

If a purchase order for standard or modified product is changed within one calendar day after the receipt of the purchase order, there will be no charge. However, if a change is required from the second calendar day following the receipt of the purchase order, a surcharge will be added. In the event that material unique to the purchase order has been purchased or manufactured, regardless of the time frame, and a change is required that eliminates the need for the purchased or manufactured material, the cost of the material as well as a surcharge will be added to the purchase order.

Cancellation Policy

All cancellations of purchase orders may be subject to a cancellation fee depending upon the stage of production. In the event that material unique to the purchase order has been purchased or manufactured, regardless of the time frame, and a cancellation is required that eliminates the need for the purchased or manufactured material, the cost of the material as well as a surcharge will be added to the purchase order. If a cancellation is received on the day of shipment, Presto Lifts' restocking policy will apply. Cancellation of custom engineered products will result in forfeiture of deposit plus any additional applicable fees.

Restocking Policy

Presto Lifts' goal is for you to be satisfied with your order. At the discretion of Presto Customer Service, merchandise may be returned, but are subject to a restocking fee. Before returning any products, please review the Return Goods Authorization Procedures and contact the customer service department for instructions.

Return Goods Authorization Policy

Presto Lifts provides the Return Goods Authorization (RGA) Policy, for specific models, as a courtesy to our distributors in the event they do not receive what they ordered. If a customer wishes to return a Presto Lifts product, please contact the Customer Service Department and request an RGA number. This request must be made on or before the fifteenth calendar day following the date of Presto Lifts' invoice for the merchandise. Not all units are returnable. Quantity orders and special designs cannot be returned under any circumstances. Presto Customer Service reserves the right for final judgement on all product returns.

The RGA number must appear on the outside of any packaging material for a return to be accepted and processed by Presto Lifts. Customers shipping returns from the Continental US, Canada, or Mexico have thirty (30) days from date of RGA issue to have the product arrive at Presto Lifts' facility. All merchandise must arrive Free on Board at Presto Lifts' facility or the shipment will be refused and returned to the sender. All credits are issued less restocking and refurbishing charges, regardless if the merchandise was damaged in transit.

Limited Warranty Policy

Presto Lifts warrants all of its products against defects in the welded structural frame and, if applicable, scissor legs from faulty material and workmanship for a period of five (5) years from the date of invoice.

A lifetime limited warranty is provided for the Airstroke ActuatorTM in all pneumatic lifts against any defect due to faulty material or workmanship.

All batteries are covered under a separate limited warranty from the battery manufacturer for a period of one year from the date of invoice.

All other components have a limited warranty against defects in faulty material and workmanship for a two (2) year period from the date of invoice and 30 day limited warranty on labor. Please note that prior authorization from Presto Lifts is required on all warranty work.

There are no implied warranties of any kind, more specifically, there are no warranties of merchantability or fitness for any particular purpose. Presto Lifts' sole warranty shall be as set forth in this limited warranty.

Presto Lifts will elect to repair or replace a defective component without charge, if any components should become defective within the limited warranty period. Proof of purchase is required for warranty. The charge for shipping the defective component is the responsibility of the buyer and must be accompanied with an RGA number. The shipping charge to return the component to the buyer is the responsibility of Presto Lifts, Inc. This limited warranty does not cover labor expense for removal or reinstallation of components after thirty days.

This limited warranty shall not cover, among other things: damages resulting from foreign matter or water, failure to provide reasonable and necessary maintenance, and if applicable, use of product while charger is plugged into an AC outlet, or failure to follow operating instructions. The limited warranty is not valid for damage resulting from negligence, accident, unreasonable use, abuse or misuse, exceeding data plate capacities or altering the product without Presto Lifts authorization.

Presto Lifts expressly disclaims and excludes any liability for consequential, incidental, indirect or punitive damages or financial loss to people or property resulting from any breach of warranty or the operation or failure of this product.

Presto Lifts makes no representation that this product complies with local, state, or federal safety/product standards codes. Should this product fail to comply in any way with those codes, it shall not be considered a defect of materials or workmanship. Presto Lifts shall not be held liable for any damages resulting from noncompliance. It is the dealer's responsibility to exercise this limited warranty. This limited warranty is provided to the original purchaser (defined as the original end user) and is nontransferable. This constitutes the complete and final agreement involving Presto Lifts and limited warranty obligations for products.

P3™ - Presto Pallet Positioner

LOAD LEVELER/ROTATOR

Load and unload pallets without stooping, stretching or walking

The P3™ -Presto Pallet Positioner automatically maintains pallets at a constant level and comfortable working height as layers of boxes are added or removed (see photos below). Leveling is accomplished by a heavy-duty, reinforced rubber airbag that once charged with shop air can handle loads up to 4,500 lbs. After airbag charging is complete the P3 can be disconnected and moved to any location in the plant. Because the P3 is pneumatic it can accommodate loads that vary substantially in weight (from 400 - 4,500) so one unit is versatile enough to work in several areas.

The P3 - Presto Pallet Positioner features a turntable top with full 360˚ rotation. Anti-friction bearings for easy turning allowing users to spin loads so they are always loading and unloading from the nearside without having to walk around the unit.

Available P3 Options:
Phenolic Cover - Keeps debris from falling through turntable
Solid Turntable Top - Accommodates small or odd size pallets
Bellows Guard - Prevents debris from collecting under unit

Capacity	Lowered Height	Raised Height	Shipping Weight
4,500lbs.	9.5"	30.5"	615 lbs.

Presto P3's improve productivity and worker comfort in a wide variety of applications including:

Printing & Publishing
Graphics Arts
Metalworking
Woodworking
Machine Feeding or Offloading
Anywhere that pallet loads are built or broken down!

Complete the System with a Presto Stacker For Easy Feeding and Offloading of the P3

To maximize the efficiency of your P3, combine it with a Presto Stacker. One stacker can feed multiple P3 units. And, because they are walkies any trained operator can place or retrieve loads from a P3 without having to rely on or wait for a fork lift truck and driver.

Presto Stackers are available in wide range of lifting heights so in addition to feeding and offloading pallets from a P3 they can also be used to access pallet racking.

For additional information, or to find out which P3/Stacker combination is right for you just ask your local Materials Handling Dealer.

Presto LIFTS™

P4 - Floor Level Loader

Features

- Lowers to floor height so load can be loaded on/off with a hand pallet truck
- Foot switch allows operator to adjust height of pallet for loading/unloading at the most convenient working height with minimum reaching or lifting
- Easy and safe pallet loading with narrow side panels to provide operator protection.
- Easily moved with a hand pallet jack and available with mounted turntables.

Model Number	Load Capacity	Lowered Height	Raised Height	Platform Size	Standard HP	Rise Time	Standard Voltage	Shipping Weight
P4 Series								
P4 2.5-28	2500 lbs	3/8”	28”	40” X 48”	1	22	115/1/60	1350 lbs
P4 2.5-28	2500 lbs	3/8”	28”	44” X 48’	1	22	115/1/60	1485 lbs
P4 2.5-28	2500 lbs	3/8”	28”	52” X 48”	1	22	115/1/60	1620 lbs
P4-28	4000 lbs	3/8”	28”	40” X 48”	1	30	115/1/60	1500 lbs
P4-28	4000 lbs	3/8”	28”	44” X 48”	1	30	115/1/60	1650 lbs
P4-28	4000 lbs	3/8”	28”	52” X 48”	1	30	115/1/60	1800 lbs

PRIMARY SUPPLY VOLTAGE

- Standard voltage is 115/1/60
- Other voltages are available

CONTROL VOLTAGE

- Standard control voltage is 115/1/60
- Any of the following controls may be specified at no additional cost:
  NEMA 1, up/down, footswitch with safety cover and 10-foot control cord
  NEMA 4, up/down, hand held pushbutton with magnet and 10-foot control cord

SHIPPING

- All standard P4s ae shipped with the following:
  Internally mounted power unit and reservoir filled with hydraulic oil
  Photoelectric toeguard
  10-foot control cord pre-wired